TAC
1354 Clifford Avenue
P. O. Box 2940
Loves Park, IL 61132-2940
www.tac.com

Vx-2x13-5xx-9-xx Series
Vx-2x13-8xx-9-xx Series
VB-2x13-500-9-xx Series

Ball Valve Assemblies with TAC DuraDrive® Actuators
Ball Valve Body/Linkage Assemblies

Selection Guide

TAC Ball Valve Assemblies

The TAC VA, VF, and VS-2x13-xxx-9-xx series Ball Valve Assemblies are complete actuator/valve assemblies that accept two-position, floating, or proportional control signals from a DDC system or a thermostat, for control of hot or chilled water, or solutions of up to 50% glycol. They consist of direct-coupled, TAC DuraDrive, spring return or non-spring return actuators mounted on 2-way (1/2" to 3") and 3-way (1/2" to 2") ball valve bodies.

Typical applications include reheat on VAV boxes, fan coil units, hot and chilled water coils in air handling units, and unit ventilators.

Ball Valve Assemblies with TAC DuraDrive

Vx-2x13-5xx-9-xx series ball valve assemblies are available with either spring return or non-spring return TAC DuraDrive actuators.

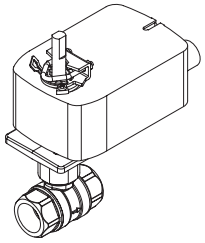

Vx-2213-5xx-9-xx
2-Way Assembly with
Spring Return Actuator

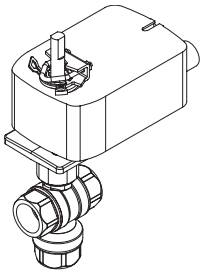

Vx-2313-5xx-9-xx
3-Way Assembly with
Spring Return Actuator

Vx-2x13-880-9-xx and Vx-2x13-8xx-9-xx series ball valve assemblies are equipped with MF4E series or Mx4D series actuators, respectively.

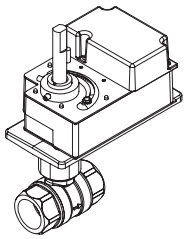

VF-2213-880-9-xx
2-Way Assembly with
MF4E Series Actuator

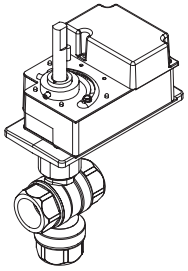

VF-2313-880-9-xx
3-Way Assembly with
MF4E Series Actuator

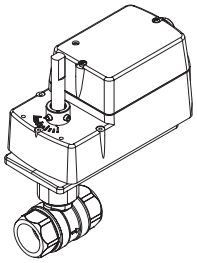

Vx-2213-8xx-9-xx
2-Way Assembly with
Mx4D Series Actuator

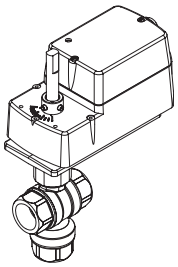

Vx-2313-8xx-9-xx
3-Way Assembly with
Mx4D Series Actuator

Ball Valve Body/Linkage Assemblies

Ball valve body/linkage assemblies allow field mounting of TAC DuraDrive actuators.

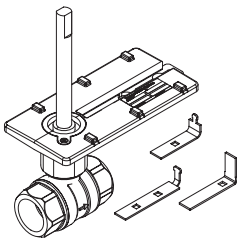

VB-2213-500-9-xx
Body/Linkage Assembly
with 2-Way Ball Valve

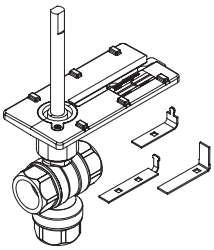

VB-2313-500-9-xx
Body/Linkage Assembly
with 3-Way Ball Valve

Copyright 2006 TAC All Rights Reserved.

Applicable Literature

F-Number	Description	Audience	Purpose
F-26642	MA40-704x, MA4x-707x, MA4x-715x TAC DuraDriveSeries Spring Return Two-Position Actuators General Instructions	– Sales Personnel – Application Engineers – Installers – Service Personnel – Start-up Technicians	Describes the actuator's features, specifications, and possible applications. Provides step-by-step mounting instructions.
F-26644	MF4x-7xx3, MF4x-7xx3-50x TAC DuraDrive Series Spring Return Floating Actuator General Instructions		
F-26645	MS4x-7xx3, MS4x-7xx3-50x TAC DuraDrive Series Spring Return Proportional Actuator General Instructions		
F-27213	MF41-6043, MF41-6083 TAC DuraDrive Series Non-Spring Return Rotary 24 Vac Three-Position Control General Instructions		
F-27373	MF4E-60430-100, MF4E-60830-100 TAC DuraDrive Series Non-Spring Return Floating Actuator General Instructions		
F-27170	MA4D-xxxx, MF4D-xxxx, MS4D-xxxx TAC DuraDrive Series Rotary Overshaft Actuators General Instructions		
F-27214	MS41-6043, MS41-6083 TAC DuraDrive Series Non-Spring Return Rotary 24 Vac Modulating Control 0 to 10 Vdc Electronic Damper Actuators General Instructions		
F-27003	Mx40-704x TAC DuraDrive Series 35 lb-in. Spring Return Actuators Mounting and Wiring Instructions	– Application Engineers – Installers – Service Personnel – Start-up Technicians	Describes the actuator's specifications and possible applications. Provides step-by-step mounting instructions.
F-26646	Mx41-6043, Mx4x-7xxx, Mx41-6xxx TAC DuraDrive Series Actuator Selection Guide	– Sales Personnel – Application Engineers – Installers – Service Personnel – Start-up Technicians	Provides actuator specifications and part number cross referencing of phased out actuators with the new TAC direct-coupled actuators.
F-26737	Mx41-6043 TAC DuraDrive Series Non-Spring Return 35 lb-in. Actuators Specification Data Sheet	– Sales Personnel – Application Engineers	Describes features and specifications of the Mx41-6043 series actuators.
F-27216	Mx41-6043 TAC DuraDrive Series Non-Spring Return 35 lb-in. Actuators Submittal Sheet	– Sales Personnel – Application Engineers	Describes features and specifications of the Mx41-6043 series actuators.
F-27087	Vx-2x13-5xx-9-xx Series Ball Valve Assemblies and VB-2x13-500-9-xx Ball Valve Body/Linkage Assemblies Installation Instructions	– Sales Personnel – Application Engineers – Installers – Service Personnel – Start-up Technicians	Describes the ball valve assembly's features, specifications, and possible applications. Provides step-by-step mounting instructions.
F-26080	EN-205 Water System Guidelines	– Application Engineers – Installers – Service Personnel – Start-up Technicians	Describes TAC approved water treatment practices.

Selection Guide Contents

Features and Benefits . . . . . page 3

Part Numbering System (Ball Valve Assemblies Using TAC DuraDrive Actuators) . . . . . page 4

Port Codes for TAC DuraDrive Ball Valve Assemblies . . . . . page 6

Ball Valve Specifications . . . . . page 7

Valve/Actuator Combinations . . . . . page 8

Actuator Specifications and Valve Assembly Mounting Dimensions . . . . . page 12

Installation Considerations . . . . . page 27

Water System Maintenance . . . . . page 28

Sizing and Selection . . . . . page 28

Copyright 2006 TAC All Rights Reserved.

Features and Benefits

Features	Benefits
Close-offs of 40 to 130 psi.	Accommodates most close-off requirements.
Available in full range of line sizes, 1/2 in. to 3 in. for 2-way valves and 1/2 in. to 2 in. for 3-way valves.	Satisfies a wide range of applications.
Cv's from 0.38 to 266.	Permits optimal valve sizing, minimizing the need for pipe reducers.
Flow characterizing insert, made of glass-filled Noryl™.	Provides equal percentage flow characteristic so that the heat output of the coil is linear with respect to valve position.
Available in both spring return and non-spring return models.	Allows power loss mode requirement to be met for any given application.
Utilizes TAC DuraDrive actuators with two-position, floating, and proportional control.	Models to fit a wide range of applications.
All models equipped with pigtail leads.	Eases installation. Reduced electrician costs.
Low-friction seals and o-rings.	Allows the use of lower-torque actuators, reducing cost.
Valve body made of forged brass ASTM B283.	Rated for static pressure of 360 psi at fluid temperatures of 20 to 250 °F (-7 to 121 °C).
"Blowout" resistant stem.	Reduces the chance of potentially harmful blowouts.
ANSI Class IV (0.01% of Cv) shutoff with 2-way valves.	Allows accurate control, saves energy.
Choices of spring return direction.	Provides Normally Closed or Normally Open spring return.
Thermally isolated mounting plate.	Protects the actuator from excess cold or heat from chilled or hot water passing through the valve. Discourages condensation.
Ball Valve Body/Linkage Assemblies are available separately. They include anti-rotation clips for TAC DuraDrive actuators.	Increases flexibility and minimizes inventory.

Ball Valve Assembly Selection Procedure

When selecting a ball valve assembly, you must determine the applicable codes for the control signal type, valve body configuration, end connection, port size, and actuator. Select a ball valve assembly part number as follows:

1. **Control Signal Type, Valve Body Configuration, and End Connection**

   Referring to "Part Numbering System" on page 4 or page 5 , select the appropriate codes for these part number fields.

2. **Valve Size (Flow Coefficient)**

   If the required flow coefficient (Cv) has not yet been determined, do so as follows:

   a. Refer to the "Sizing and Selection" section on pages 28 to 32, to calculate the required Cv.

   b. Select the nearest available Cv and corresponding valve body port code from Table-1 (2-way) or Table-2 (3-way) on page 6.

   Note: If this results in a valve that is smaller than pipe size, the actual effective Cv of the installed valve will vary from the nominal Cv as shown in Table-9 on page 31 (2-way valves) and Table-10 on page 32 (3-way valves).

3. **Actuator**

   Select the appropriate actuator and code, according to "Part Numbering System" on page 4 or page 5, based on the control signal type, required valve normal position, and voltage requirements. For detailed actuator information, refer to the applicable actuator specifications on page ,12, 15, 18, 21, or 24.

   Note: Ball Valve Assemblies with TAC DuraDrive actuators use the basic actuators. However, if an actuator with auxiliary switch(es) is required, you may field-assemble a ball valve assembly using a ball valve body/linkage assembly (VB-2x13-500-9-xx). For information on switch-equipped actuators, refer to page 12 or page 21.

4. **Close-off Pressure**

   Confirm in Table-4, Table-5, Table-6, or Table-7 that the selected actuator and valve body combination provides sufficient close-off pressure. If no close-off pressure is shown, the valve body/actuator combination is not valid.

5. **Available Space**

   If available space is a consideration, check the appropriate dimensional figure (Figure-1 through Figure-10) and its accompanying table for any potential fit problems.

Copyright 2006 TAC All Rights Reserved.

Part Numbering System

Ball Valve Assemblies Using TAC DuraDrive Actuators

V x - 2 x 1 3 - 5 x x - 9 - x x

Control Signal Type
A = Two Position
F = Floating
S = Proportional
B = Valve Body & Linkage (less actuator)

Connection
3 = Threaded NPT

Port Code
Refer to separate Port Code table

Configuration
2 = 2-Way
3 = 3-Way Mixing

Actuator Code 1 2				Valves Used On					
				1/2" to 1"		1-1/4"		1-1/2" to 3"	1-1/2" to 2"
Model	Code	Normal Position	Voltage	2-way	3-way	2-way	3-Way	2-Way	3-way
Two-Position									
MA40-7040	**522**	SR Close	120 Vac	N/A[b]	N/A[b]	X	X	X	X
MA40-7040	**532**	SR Open	120 Vac	N/A[b]	N/A[b]	X	X	X	X
MA40-7043	**526**	SR Close	24 Vac	N/A[b]	N/A[b]	X	X	X	X
MA40-7043	**536**	SR Open	24 Vac	N/A[b]	N/A[b]	X	X	X	X
Floating									
MF41-6043	**505**	NSR	24 Vac	N/A[b]	N/A[b]	N/A[b]	N/A[b]	—	—
MF41-6083	**506**	NSR	24 Vac	—	—	—	—	N/A[b]	N/A[b]
MF40-7043	**526**	SR Close	24 Vac	N/A[b]	N/A[b]	X	X	X	X
MF40-7043	**536**	SR Open	24 Vac	N/A[b]	N/A[b]	X	X	X	X
Proportional									
MS41-6043	**505**	NSR	24 Vac	N/A[b]	N/A[b]	X	X	—	—
MS41-6083	**506**	NSR	24 Vac	—	—	—	—	X	X
MS40-7043	**526**	SR Close	24 Vac	N/A[b]	N/A[b]	X	X	X	X
MS40-7043	**536**	SR Open	24 Vac	N/A[b]	N/A[b]	X	X	X	X
Valve Body/Linkage Assembly [a] **VB-2213-500-9-xx, VB-2313-500-9-xx**									

SR = Spring Return
NSR = Non-Spring Return

[a] Includes valve body, linkage, and anti-rotation clips for spring return and non-spring return TAC DuraDrive actuators, listed above.

[b] Factory assemblies not available. Purchase actuator and VB-2x13-500-9-xx valve body/linkage separately and field assemble..

1 Normal position for 3-way spring return ball valve assemblies refers to A to AB ports.

2 Only the listed 35 lb-in. and 70 lb-in. TAC DuraDrive actuators are compatible with ball valve body/linkage assemblies.

Copyright 2006 TAC All Rights Reserved.

Part Numbering System

Ball Valve Assemblies Using TAC DuraDrive Actuators

V x - 2 x 1 3 - x x x - 9 - x x

Control Signal Type
A = Two Position
F = Floating
S = Proportional
B = Valve Body & Linkage (less actuator)

Configuration
2 = 2-Way
3 = 3-Way Mixing

Connection
3 = Threaded NPT

Port Code
Refer to separate Port Code table

Actuator Code 1 2				Valves Used On				
					1/2" to 1"		1-1/4" to 3"	1-1/4" to 2"
Model [a]	**Code**	**Normal Position**	**Voltage**	**Type**	**2-way**	**3-way**	**2-way**	**3-way**
Two-Position								
MA4D-7030-000	**815**	SR Open	120 Vac	—	X	X	—	—
MA4D-7031-000	**816**	SR Open	230 Vac	—	X	X	—	—
MA4D-8030-000	**817**	SR Closed	120 Vac	—	X	X	—	—
MA4D-8031-000	**818**	SR Closed	230 Vac	—	X	X	—	—
MA4D-7033-000	**N/A**[b]	SR Open	24 Vac	—	—	—	—	—
MA4D-7033-100	**821**	SR Open	24 Vac	—	X	X	—	—
MA4D-8033-000	**N/A**[b]	SR Closed	24 Vac	—	—	—	—	—
MA4D-8033-100	**831**	SR Closed	24 Vac	—	X	X	—	—
Floating								
MF4D-7033-000	**N/A**[b]	SR Open	24 Vac	—	—	—	—	—
MF4D-7033-100	**821**	SR Open	24 Vac	—	X	X	—	—
MF4D-8033-000	**N/A**[b]	SR Closed	24 Vac	—	—	—	—	—
MF4D-8033-100	**831**	SR Closed	24 Vac	—	X	X	—	—
MF4D-6083-000	**N/A**[b]	NSR	24 Vac	—	—	—	—	—
MF4D-6083-100	**N/A**[b]	NSR	24 Vac	—	X	X	X	X
MF4E-60830-100	**880**	NSR	24 Vac	—	X	X	X	X
Proportional								
MS4D-7033-000	**N/A**[b]	SR Open	24 Vac	2-10 Vdc	—	—	—	—
MS4D-7033-100	**821**	SR Open	24 Vac	2-10 Vdc	X	X	—	—
MS4D-7033-020	**N/A**[b]	SR Open	24 Vac	0-3 Vdc	—	—	—	—
MS4D-7033-120	**N/A**[b]	SR Open	24 Vac	0-3 Vdc	X	X	—	—
MS4D-7033-030	**N/A**[b]	SR Open	24 Vac	6-9 Vdc	—	—	—	—
MS4D-7033-130	**825**	SR Open	24 Vac	6-9 Vdc	X	X	—	—
MS4D-7033-050	**N/A**[b]	SR Open	24 Vac	0-10 Vdc	—	—	—	—
MS4D-7033-150	**827**	SR Open	24 Vac	0-10 Vdc	X	X	—	—
MS4D-7033-060	**N/A**[b]	SR Open	24 Vac	4-20 mA	—	—	—	—
MS4D-7033-160	**829**	SR Open	24 Vac	4-20 mA	X	X	—	—
MS4D-8033-000	**N/A**[b]	SR Closed	24 Vac	2-10 Vdc	—	—	—	—
MS4D-8033-100	**831**	SR Closed	24 Vac	2-10 Vdc	X	X	—	—
MS4D-8033-020	**N/A**[b]	SR Closed	24 Vac	0-3 Vdc	—	—	—	—
MS4D-8033-120	**N/A**[b]	SR Closed	24 Vac	0-3 Vdc	X	X	—	—
MS4D-8033-030	**N/A**[b]	SR Closed	24 Vac	6-9 Vdc	—	—	—	—
MS4D-8033-130	**835**	SR Closed	24 Vac	6-9 Vdc	X	X	—	—
MS4D-8033-050	**N/A**[b]	SR Closed	24 Vac	0-10 Vdc	—	—	—	—
MS4D-8033-150	**837**	SR Closed	24 Vac	0-10 Vdc	X	X	—	—
MS4D-8033-060	**N/A**[b]	SR Closed	24 Vac	4-20 mA	—	—	—	—
MS4D-8033-160	**839**	SR Closed	24 Vac	4-20 mA	X	X	—	—
MS4D-6083-000	**N/A**[b]	NSR	24 Vac	2-10 Vdc	—	—	—	—
MS4D-6083-100	**841**	NSR	24 Vac	2-10 Vdc	X	X	X	X
MS4D-6083-020	**N/A**[b]	NSR	24 Vac	0-3 Vdc	—	—	—	—
MS4D-6083-120	**N/A**[b]	NSR	24 Vac	0-3 Vdc	X	X	X	X
MS4D-6083-030	**N/A**[b]	NSR	24 Vac	6-9 Vdc	—	—	—	—
MS4D-6083-130	**845**	NSR	24 Vac	6-9 Vdc	X	X	X	X
MS4D-6083-050	**N/A**[b]	NSR	24 Vac	0-10 Vdc	—	—	—	—
MS4D-6083-150	**847**	NSR	24 Vac	0-10 Vdc	X	X	X	X
MS4D-6083-060	**N/A**[b]	NSR	24 Vac	4-20 mA	—	—	—	—
MS4D-6083-160	**849**	NSR	24 Vac	4-20 mA	X	X	X	X
Valve Body/Linkage Assembly [c]	**VB-2213-500-9-xx, VB-2313-500-9-xx**							

1 Normal position for 3-way spring return ball valve assemblies refers to A to AB ports.

2 Only the listed 30 lb-in. and 70 lb-in. TAC DuraDrive actuators are compatible with ball valve body/linkage assemblies.

SR = Spring Return NSR = Non-Spring Return

[a] "-0X0" models have appliance cables. "-1X0" models have plenum cables.

[b] Factory assemblies not available. Purchase actuator and valve body separately and field assemble.

[c] Includes valve body, linkage, and anti-rotation clips for spring return and non-spring return TAC DuraDrive actuators, listed above.

Copyright 2006 TAC All Rights Reserved.

Port Codes for TAC DuraDrive Ball Valve Assemblies

Table-1 2-Way TAC Ball Valve Assemblies—Sizes, Port Codes, and Cv's.

Size	2-Way		
	Port Code	C_v [a]	k_{vs} [a]
1/2"	01	0.38	0.33
	02	0.68	0.59
	03	1.3	1.1
	04	2.6	2.2
	05	4.7	4.1
	06	8.0	6.9
	07	11.7[b]	10.1
3/4"	11	0.31	0.27
	12	0.63	0.54
	13	1.2	1.0
	14	2.5	2.2
	15	4.3	3.7
	16	10.1	8.7
	17	14.7[b]	12.7
	18	28.6[b]	24.7
1"	21	4.4	3.8
	22	9.0	7.8
	23	15.3	13.2
	24	26.1	22.6
	25	28.4[b]	24.6
	26	43.9[b]	38.0
	27	54.2[b]	46.9
1-1/4"	41	4.4	3.8
	42	8.3	7.2
	43	14.9	12.9
	44	36.5	31.6
	45	41.1[b]	35.6
	46	102.3[b]	88.5
1-1/2"	51	22.8	19.7
	52	41.3	35.7
	53	73.9[b]	63.9
	54	171.7[b]	148.5
2"	61	41.7	36.1
	63	71.1	61.5
	65	108[b]	93.4
	66	210	181.7
	67	266[b]	230.1
2-1/2"	71	45	38.9
	72	55	47.6
	73	72.3	62.5
	74	101	87.4
	75	162	140.1
	76	202[b]	174.7
3"	82	63	54.5
	85	145[b]	125.4

[a] $C_v = \frac{gpm}{\sqrt{\Delta P}}$ (where ΔP is measured in psi) $k_{vs} = C_v / 1.156$

$k_{vs} = \frac{m^3/h}{\sqrt{\Delta P}}$ (where ΔP is measured in bar; 1 bar = 100 kPa)

[b] Denotes a full port valve, without the characterized insert.

Table-2 3-Way TAC Ball Valve Assemblies—Sizes, Port Codes, and Cv's

Size	3-Way		
	Port Code	A Port C_v [a b]	k_{vs} [a]
1/2"	01	0.33	0.28
	02	0.59	0.51
	03	1	0.86
	04	2.4	2.1
	05	4.3	3.7
	06	8.0[c]	6.9
3/4"	11	0.40	0.35
	12	0.66	0.57
	13	1.3	1.1
	14	2.4	2.1
	15	3.8	3.3
	16	11[cd]	10.9
1"	21	0.40	0.35
	22	0.65	0.56
	23	1.3	1.1
	24	2.3	2.0
	25	3.5	3.0
	26	4.5	3.9
	27	8.6	7.4
	28	10[c]	8.6
	29	14.9	12.9
	30	22.3[c]	19.3
	31	30.8[c]	26.6
1-1/4"	41	4.1	3.5
	43	8.7	7.5
	44	12.7	11.0
	45	19.4[c]	16.8
	46	34.1[c]	29.5
1-1/2"	51	4	3.5
	52	8.3	7.2
	53	13.4	11.6
	54	23.5	20.3
	55	32[c]	27.7
	56	61.1[c]	52.8
2"	61	23.9	20.7
	62	38.2	33.0
	63	56.7[c]	49.0
	64	108.5[c]	93.8

[a] $C_v = \frac{gpm}{\sqrt{\Delta P}}$ (where ΔP is measured in psi) $k_{vs} = C_v / 1.156$

$k_{vs} = \frac{m^3/h}{\sqrt{\Delta P}}$ (where ΔP is measured in bar; 1 bar = 100 kPa)

[b] B port Cv is 80% of A port Cv.
[c] Denotes a full port valve, without the characterized insert.
[d] Previously Cv was 12.6, kvs was 10.9.

Copyright 2006 TAC All Rights Reserved.

Ball Valve Specifications

Table-3 Specifications for TAC Ball Valve Assemblies.

Valve Assembly Series		2-Way	3-Way Mixing
Ball Valve Assemblies using TAC DuraDrive Actuators		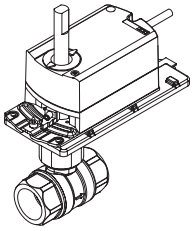 **Non-Spring Return** **Vx-2213-505-9-P** Vx-2213-506-9-P 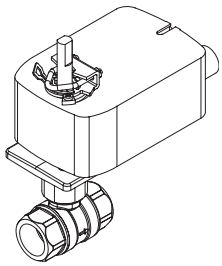 **Spring Return** **Vx-2213-5xx-9-P**	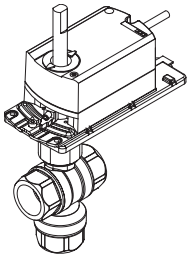 **Non-Spring Return** **Vx-2313-505-9-P** Vx-2313-506-9-P 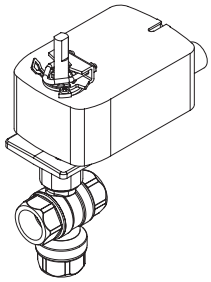 **Spring Return** **Vx-2313-5xx-9-P**
		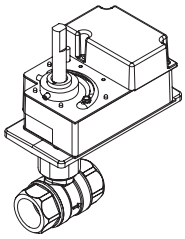 **Non-Spring Return** **VF-2213-880-9-P** 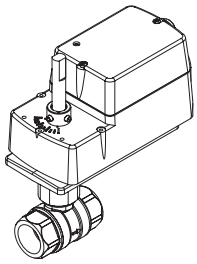 **Spring Return** **Vx-2213-81x-9-P** **Vx-2213-82x-9-P** **Vx-2213-83x-9-P** **Non-Spring Return** Vx-2213-84x-9-P	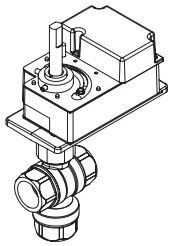 **Non-Spring Return** **VF-2313-880-9-P** 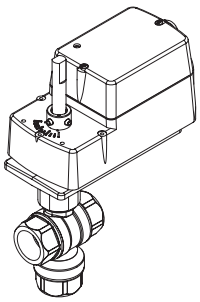 **Spring Return** **Vx-2313-81x-9-P** **Vx-2313-82x-9-P** **Vx-2313-83x-9-P** **Non-Spring Return** Vx-2313-84x-9-P
Applications		Chilled or Hot Water, up to 50% Glycol Solution	
Type of End Fitting		NPT Screwed	
Size		1/2 in. through 3 in.	1/2 in. through 2 in.
Valve Assembly Series		**Vx-2213-xxx-9-P**	**Vx-2313-xxx-9-P**
Flow Type		Equal Percentage	
Material	**Body**	Forged Brass (ASTM B283)	
	Ball	Nickel/Chromium-Plated Brass	
	Characterizing Insert	Glass-filled Noryl	
	Stem	Brass	
	Ball Seals	Reinforced Teflon® Seals with EPDM O-Rings	
	Stem Seals	EPDM O-Rings	
	Mounting Plate	Glass-filled Polymer	
Maximum Static Pressure		360 psig (25 bar)	
Maximum Operating Differential Pressure		Same as close-off pressures shown in Table-4 or Table-6. Refer to "Cavitation Limitations on Valve Pressure Drop" on page 30.	Same as close-off pressures shown in Table-5 or Table-7. Refer to "Cavitation Limitations on Valve Pressure Drop" on page 30.
Seat Leakage		ANSI Class IV (0.01% of C_v)	ANSI Class IV (0.01% of C_v), piped coil-side outlet to A only
Fluid (water) Temperature	**Minimum**[a]	20 °F (-7 °C)	
	Maximum	250 °F (121 °C)	

[a] Freeze protection required.

Copyright 2006 TAC All Rights Reserved.

Valve/Actuator Combinations

2-Way Ball Valve Assemblies Using TAC DuraDrive Actuators

Note: All valve sizes — ANSI Class IV (0.01% of C_v) shut-off

Table-4 Selection Chart—2-Way Ball Valve Assemblies with TAC DuraDrive Actuators.

2-Way Ball Valve Assemblies with TAC DuraDrive			Non-Spring Return [a]		Spring Return
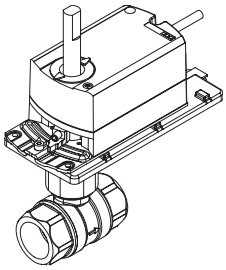 Vx-2213-505-9-P 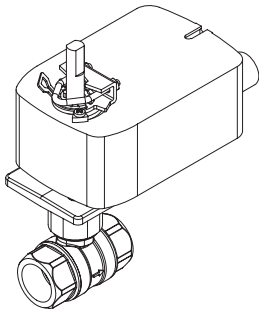 Vx-2213-5xx-9-P			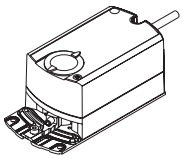		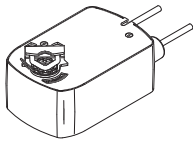
			Actuator Models (Actuator Codes)		
			24 Vac	24 Vac	24 Vac
			Floating MF41-6043 (**505**) **Proportional** MS41-6043 (**505**)	**Floating** MF41-6083 (**506**) **Proportional** MS41-6083 (**506**)	**Two-Position** MA40-7043 (N.C.) (**526**) MA40-7043 (N.O.) (**536**) **Floating** MF40-7043 (N.C.) (**526**) MF40-7043 (N.O.) (**536**) **Proportional** MS40-7043 (N.C.) (**526**) MS40-7043 (N.O.) (**536**)
					120 Vac
					Two-Position MA40-7040 (N.C.) (**522**) MA40-7040 (N.O.) (**532**)
Valve Assembly Part Number	**Valve Size (in.)**	**P Code [b]**	**Close-Off Pressure, psi (kPa)**		
Ball Valve Assembly with TAC DuraDrive Vx-2213-5xx-9-P[c] **Valve/Linkage Assembly VB-2213-500-9-P**	1/2	1, 2, 3, 4, 5, 6, 7	130 (896) (field assemble[d])	—	130 (896) (field assemble[d])
	3/4	11, 12, 13, 14, 15, 16, 17, 18	130 (896) (field assemble[d])	—	130 (896) (field assemble[d])
	1	21, 22, 23, 24, 25, 26, 27	100 (689) (field assemble[d])	—	100 (689) (field assemble[d])
	1-1/4	41. 42, 43, 44, 45, 46	70 (482) (field assemble[d])	—	70 (482)
	1-1/2	51, 52, 53, 54	—	70 (482 (field assemble[d])	70 (482)
	2	61, 63, 65, 66, 67	—	70 (482) (field assemble[d])	70 (482)
	2-1/2	71, 72, 73, 74, 75, 76	—	70 (482) (field assemble[d])	70 (482)
	3	82, 85	—	70 (482) (field assemble[d])	70 (482)

[a] Non-spring return 2-way ball valve assemblies are shipped open, voltage rise to close.
[b] To find the corresponding flow coefficients for these port codes, refer to "Port Codes for TAC DuraDrive Ball Valve Assemblies" on page 6.
[c] To determine a specific part number, identify the actuator's control signal type ("A," "F," or "S"), actuator code, and P code. Refer to "Part Numbering System" on page 4.
[d] Factory assemblies not available. Purchase actuator and VB-2213-500-9-xx valve body/linkage and field assemble.

Copyright 2006 TAC All Rights Reserved.

3-Way Ball Valve Assemblies Using TAC DuraDrive Actuators

Note: All valve sizes — ANSI Class IV (0.01% of C_V) shut off, piped coil-side outlet to A.

Table-5 Selection Chart—3-Way Mixing Ball Valve Assemblies with TAC DuraDrive Actuators.

3-Way Mixing Ball Valve Assemblies with TAC DuraDrive [a] [b]			Non-Spring Return		Spring Return
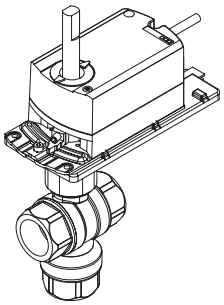 Non-Spring Return (field assemble[e]) 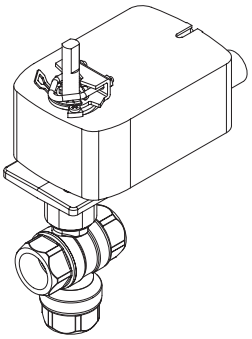 Vx-2313-5xx-9-P			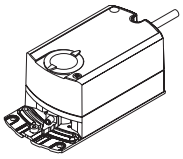		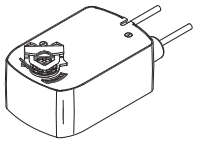
			Actuator Models (Actuator Codes)		
			24 Vac	24 Vac	24 Vac
			Floating MF41-6043 **Proportional** MS41-6043	**Floating** MF41-6083 **Proportional** MS41-6083	**Two-Position** MA40-7043 (N.C.) (**526**) MA40-7043 (N.O.) (**536**) **Floating** MF40-7043 (N.C.) (**526**) MF40-7043 (N.O.) (**536**) **Proportional** MS40-7043 (N.C.) (**526**) MS40-7043 (N.O.) (**536**)
					120 Vac
					Two-Position MA40-7040 (N.C.) (**522**) MA40-7040 (N.O.) (**532**)
Valve Assembly Part Number	**Valve Size (in.)**	**P Code [c]**	**Close-Off Pressure, psi (kPa)**		
Ball Valve Assembly with TAC DuraDrive Vx-2313-5xx-9-P[d] **Valve/Linkage Assembly VB-2313-500-9-P**	1/2	1, 2, 3, 4, 5, 6	50 (344) (field assemble[e])	—	50 (344) (field assemble[e])
	3/4	11, 12, 13, 14, 15, 16	50 (344) (field assemble[e])	—	50 (344) (field assemble[e])
	1	21, 22, 23, 24, 25, 26, 27, 28, 29, 30, 31	50 (344 (field assemble[e])	—	50 (344) (field assemble[e])
	1-1/4	41, 43, 44, 45, 46	40 (275) (field assemble[e])	—	40 (275)
	1-1/2	51, 52, 53, 54, 55, 56	—	40 (275) (field assemble[e])	40 (275)
	2	61, 62, 63, 64	—	40 (275) (field assemble[e])	40 (275)

[a] Non-spring return 3-way mixing ball valve assemblies are shipped A to AB open, voltage rise to close.
[b] Spring return 3-way mixing valves are normally A to AB closed.
[c] To find the corresponding flow coefficients for these port codes, refer to "Port Codes for TAC DuraDrive Ball Valve Assemblies" on page 6.
[d] To determine a specific part number, identify the actuator's control signal type ("A," "F," or "S"), actuator code, and P code. Refer to "Part Numbering System" on page 4.
[e] Factory assemblies not available. Purchase actuator and VB-2313-500-9-xx valve body/linkage and field assemble.

Copyright 2006 TAC All Rights Reserved.

2-Way Ball Valve Assemblies Using TAC DuraDrive Actuators

Note: All valve sizes — ANSI Class IV (0.01% of C_V) shut-off

Table-6 Selection Chart—2-Way Ball Valve Assemblies with Tac DuraDrive Actuators.

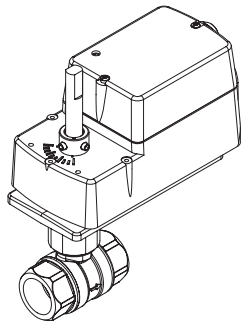

Spring Return
Vx-2213-81x-9-P
Vx-2213-82x-9-P
Vx-2213-83x-9-P
Non-Spring Return
Vx-2213-84x-9-P

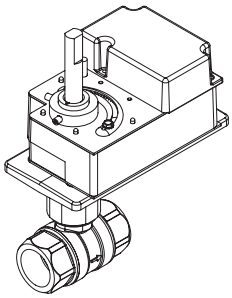

Non-Spring Return
VF-2213-880-9-P

			Non-Spring Return [a]		Spring Return
			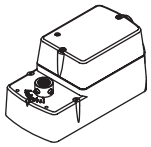	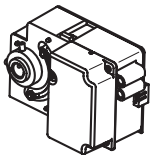	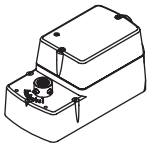
			Actuator Models (Actuator Codes)		
			24 Vac	**24 Vac**	**24 Vac**
			Floating MF4D-6083 **Proportional** MS4D-6083 (**841**) to (**849**)	**Floating** MF4E-60830-100 (**880**)	**Two-Position** MA4D-7033 (N.O.) (**821**) MA4D-8033 (N.C.) (**831**) **Floating** MF4D-7033 (N.O.) (**821**) MF4D-8033 (N.C.) (**831**) **Proportional** MS4D-7033 (N.O.) (**821**) to (**829**) MS4D-8033 (N.C.) (**831**) to (**839**)
					120 Vac
					Two-Position MA4D-7030 (N.O.) (**815**) MA4D-8030 (N.C.) (**817**)
					230 Vac
					Two-Position MA4D-7031 (N.O.) (**816**) MA4D-8031 (N.C.) (**818**)
Valve Assembly Part Number	**Valve Size (in.)**	**P Code [b]**	**Close-Off Pressure, psi (kPa)**		
Ball Valve Assembly Vx-2213-8xx-9-P[c] **Valve/Linkage Assembly VB-2213-500-9-P**	1/2	1, 2, 3, 4, 5, 6, 7	130 (896)	130 (896)	130 (896)
	3/4	11, 12, 13, 14, 15, 16, 17, 18	130 (896)	130 (896)	130 (896)
	1	21, 22, 23, 24, 25, 26, 27	100 (689)	100 (689)	100 (689)
	1-1/4	41. 42, 43, 44, 45, 46	70 (482)	70 (482)	—
	1-1/2	51, 52, 53, 54	70 (482)	70 (482)	—
	2	61, 63, 65, 66, 67	70 (482)	70 (482)	—
	2-1/2	71, 72, 73, 74, 75, 76	70 (482)	70 (482)	—
	3	82, 85	70 (482)	70 (482)	—

[a] Non-spring return 2-way ball valve assemblies are shipped open, voltage rise to close.
[b] To find the corresponding flow coefficients for these port codes, refer to "Port Codes for TAC DuraDrive Ball Valve Assemblies" on page 6.
[c] To determine a specific part number, identify the actuator's control signal type ("A," "F," or "S"), actuator code, and P code. Refer to "Part Numbering System" on page 5.

Copyright 2006 TAC All Rights Reserved.

3-Way Mixing Ball Valve Assemblies Using TAC DuraDrive Actuators

Note: All valve sizes — ANSI Class IV (0.01% of C_V) shut off, piped coil-side outlet to A.

Table-7 Selection Chart—3-Way Mixing Ball Valve Assemblies with TAC DuraDrive Actuators.

3-Way Mixing Ball Valve Assemblies with TAC DuraDrive[a] [b]			Non-Spring Return		Spring Return	
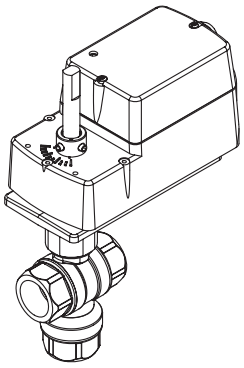 **Spring Return** Vx-2313-81x-9-P Vx-2313-82x-9-P Vx-2313-83x-9-P **Non-Spring Return** Vx-2313-84x-9-P 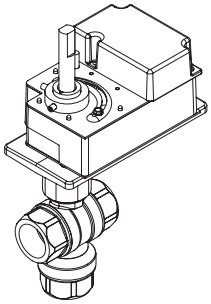 VF-2313-880-9-P			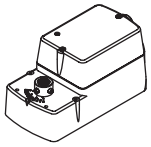	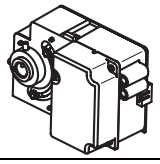	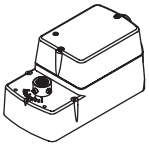	
			Actuator Models (Actuator Codes)			
			24 Vac	**24 Vac**	**24 Vac**	**120 Vac**
			Floating MF4D-6083 (**840**) (**841**) **Proportional** MS4D-6083 (**841**) to (**849**)	**Floating** MF4E-60830-100 (**880**)	**Two-Position** MA4D-7033 (N.O.) (**821**) MA4D-8033 (N.C.) (**831**) **Floating** MF4D-7033 (N.O.) (**821**) MF4D-8033 (N.C.) (**831**) **Proportional** MS4D-7033 (N.O.) (**821**) to (**829**) MS4D-8033 (N.C.) (**831**) to (**839**)	**Two-Position** MA4D-7030 (N.O.) (**815**) MA4D-8030 (N.C.) (**817**) **230 Vac** **Two-Position** MA4D-7031 (N.O.) (**816**) MA4D-8031 (N.C.) (**818**)
Valve Assembly Part Number	**Valve Size (in.)**	**P Code [c]**	**Close-Off Pressure, psi (kPa)**			
Ball Valve Assembly Vx-2313-8xx-9-P[d] **Valve/Linkage Assembly VB-2313-500-9-P**	1/2	1, 2, 3, 4, 5, 6	50 (344)	50 (344)	50 (344)	
	3/4	11, 12, 13, 14, 15, 16	50 (344)	50 (344)	50 (344)	
	1	21, 22, 23, 24, 25, 26, 27, 28, 29, 30, 31	50 (344)	50 (344)	50 (344)	
	1-1/4	41, 43, 44, 45, 46	40 (275)	40 (275)	—	
	1-1/2	51, 52, 53, 54, 55, 56	40 (275)	40 (275)	—	
	2	61, 62, 63, 64	40 (275)	40 (275)	—	

[a] Non-spring return 3-way mixing ball valve assemblies are shipped A to AB open, voltage rise to close.
[b] Spring return 3-way mixing valves are normally A to AB closed.
[c] To find the corresponding flow coefficients for these port codes, refer to "Port Codes for TAC DuraDrive Ball Valve Assemblies" on page 6.
[d] To determine a specific part number, identify the actuator's control signal type ("A," "F," or "S"), actuator code, and P code. Refer to "Part Numbering System" on page 5.

Copyright 2006 TAC All Rights Reserved.

Actuator Specifications and Valve Assembly Mounting Dimensions

Valve Assemblies with MF41-6043, MF41-6083, MS41-6043, and MS41-6083 Non-Spring Return TAC DuraDrive Actuators

Actuator Specifications

Inputs

Control Signal

MF41-6043 and MF41-6083: Floating three-position control, 24 Vac.

MS41-6043 and MS41-6083: Proportional, 0 to 10 Vdc; input resistance 100KΩ.

Control signal adjustment available with MS41-6043-520 and MS41-6043-522:

Start point (offset) — Between 0 and 5 Vdc (factory setting = 0 Vdc)

Span — 2 to 30 Vdc

Power Requirements

All 24 Vac circuits are Class 2.

Part Number	Power Input @ 50/60 Hz			
	Voltage[a]	Running VA	Holding VA	Watts
MF41-6043 and MF41-6083	24 Vac +20/-15%	2.3	—	2.0
MS41-6043 and MS41-6083	24 Vac +20/-15%	3.3	1.2	3.0

[a] 24 Vac +20/-10% for ambient temperatures 90 to 130 °F (Mx41-6083 only).

Connections

3 ft. (0.9 m) long, 18 AWG plenum-rated leads.

Motor Type

Synchronous

Outputs

Electrical

Feedback potentiometer available for MF41-6043/6083-510: 0 to 1000 Ω < 10 mA

Position feedback voltage for MS41-6043/6083: 0 to 10 Vdc, 1 mA

Auxiliary Switches: Dual auxiliary switches available with MF41-6043/6083-502, MS41-6043/6083-502, MF41-6043/6083-522 and MS41-6043/6083-522 when these actuators are ordered as separate units. Auxiliary switches are not offered with factory ball valve assemblies.

AC Rating: 24 Vac, 4 A resistive, 2 A inductive

DC Rating: 12 to 30 Vdc, DC 2 A

Timing:

Part Number	90° Timing in Sec.	
	At 60 Hz	At 50 Hz
MF41-6043 MS41-6043	90	108
MF41-6083 MS41-6083	125	150

Switch hysteresis: 3° rotation

Switch Range:

Switch A — 0 to 90° range in 5° intervals
Recommended range usage — 0 to 45°
Factory setting — 5°
Switch B — 0 to 90° range in 5° intervals
Recommended range usage — 45 to 90°
Factory setting — 85°

Mechanical

Output torque rating: 35 lb-in. (4 N-m) for Mx41-6043; 70 lb-in. (8 N-m) for Mx41-6083

Stroke: Normal angle of rotation is 90°, limited to a maximum of 95°. Field adjustable to limit travel on either end of stroke.

Position indicator: Adjustable pointer is provided for position indication.

Output shaft setscrew: Tightening torque 55 to 60 lb-in. (6.3 to 6.8 N-m).

Environment

Temperature Limits

Shipping and storage: -40 to 158 °F (-40 to 70 °C) ambient.
Operating: -25 to 130 °F (-32 to 55 °C) ambient.

Humidity

5 to 95% RH, non-condensing.

Locations

NEMA Type 2 (IEC IP54).

Agency Listings (Actuator)

UL

UL-873, Underwriters Laboratories.

cUL

Canadian Standards C22.2 No. 24-93.

European Community

EMC Directive (89/336/EEC). Emissions (EN50081-1). Immunity (EN50081-2).

Copyright 2006 TAC All Rights Reserved.

2-Way Ball Valve Assembly Dimensions

Valve Assembly Part Number	Valve Size in.	P Code [a]	Valve Dimensions in inches (millimetres) (Refer to Figure-1)			
			A	B	C	D
2-Way VF-2213-505-9-P VF-2213-506-9-P VS-2213-505-9-P VS-2213-506-9-P	1/2	1, 2, 3, 4, 5, 7	2-3/8 (60)	6-5/8 (168)	8 (203)	2-3/4 (69)
		6	3-11/32 (85)	6-7/8 (175)	8-3/16 (208)	2-7/8 (72)
	3/4	11, 12, 13, 14, 15, 17	2-3/8 (60)	6-5/8 (168)	8 (203)	2-3/4 (69)
		16, 18	2-5/8 (67)	6-5/8 (168)	8-3/16 (208)	2-7/8 (72)
	1	21, 23	3-1/16 (78)	6-3/4 (171)	8-1/2 (216)	3 (76)
		22, 25	3-3/4 (95)	7-1/16 (179)	8-3/16 (208)	2-7/8 (72)
		24, 26	4-5/16 (110)	7-7/16 (189)	9-1/8 (231)	3-1/4 (82)
		27	3-1/16 (78)	7-9/16 (192)	8-1/2 (216)	3 (76)
	1-1/4	41, 42, 43, 45	3 (76)	6-3/4 (171)	8-7/16 (215)	3-1/8 (79)
		44, 46	3-5/8 (92)	6-13/16 (173)	9-1/8 (231)	3-1/4 (82)
	1-1/2	51, 53	4-11/16 (119)	7-9/16 (192)	9-1/8 (231)	3-1/4 (82)
		52, 54	4-1/16 (103)	7-1/16 (179)	9-5/8 (244)	3-3/4 (95)
	2	61, 65	4-21/32 (118)	7-1/2 (191)	9-5/8 (244)	3-3/4 (95)
		63, 66, 67	4-15/16 (125)	7-7/16 (189)	10-3/8 (264)	4-1/16 (103)
	2-1/2	71, 72, 76, 73, 74, 75	4-3/4 (121)	7-9/16 (192)	10-3/8 (264)	4-1/16 (103)
	3	82, 85	5-1/16 (129)	7-3/4 (197)	10-9/16 (268)	4-1/16 (103)

[a] To find the corresponding flow coefficients for these port codes, refer to "Port Codes for TAC DuraDrive Ball Valve Assemblies" on page 6.

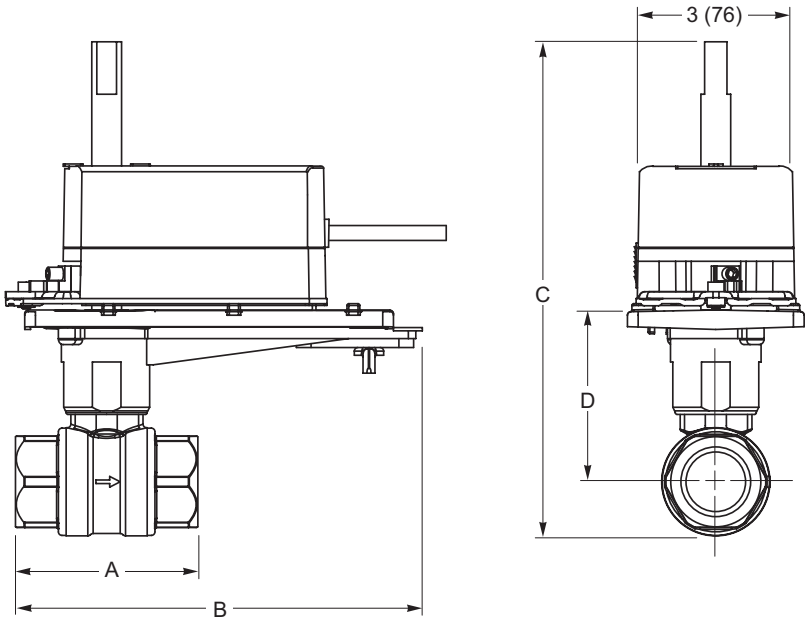

Figure-1 Mx41-6043 or Mx41-6083 with 2-Way Ball Valve.

Copyright 2006 TAC All Rights Reserved.

3-Way Mixing Ball Valve Assembly Dimensions							
Valve Assembly Part Number	Valve Size in.	P Code [a]	Valve Dimensions in inches (millimetres) (Refer to Figure-2)				
			A	B	C	D	E
3-Way VF-2313-505-9-P VF-2313-506-9-P VS-2313-505-9-P VS-2313-506-9-P	1/2	1, 2, 3, 4, 5, 6	2-5/8 (67)	6-1/2 (165)	9-5/16 (237)	2-7/8 (72)	2 (51)
	3/4	11, 12, 13, 14, 15, 16	2-5/8 (67)	6-1/2 (165)	9-5/16 (237)	2-7/8 (72)	2 (51)
	1	21, 22, 23, 24, 25, 28	3-3/4 (95)	7-1/4 (184)	9-1/2 (238)	2-7/8 (72)	2-1/16 (52)
		27, 30	3-1/16 (78)	6-3/4 (171)	9-7/8 (251)	3 (76)	2-7/16 (62)
		26, 29, 31	4-5/16 (110)	7-3/4 (197)	10-7/8 (275)	3-1/4 (82)	3-1/8 (80)
	1-1/4	45	3 (76)	6-3/4 (171)	9-7/8 (251)	3 (76)	2-7/16 (61)
		41, 43, 44, 46	3-5/8 (92)	7-3/16 (182)	10-1/2 (267)	3-1/4 (82)	2-13/16 (72)
	1-1/2	51, 52, 53, 55	4-1/2 (114)	7-3/4 (197)	10-3/8 (264)	3-1/4 (82)	2-3/4 (69)
		54	4-1/16 (103)	7-1/16 (179)	11-3/8 (288)	3-3/4 (95)	3-3/16 (81)
		56	4-1/16 (103)	7-3/4 (197)	11-3/8 (288)	3-3/4 (95)	3-3/16 (81)
	2	61, 63	3-15/16 (100)	7-1/8 (181)	11-1/4 (287)	3-3/4 (95)	3-1/8 (79)
		62, 64	5 (127)	7-3/4 (197)	12-1/4 (314)	4-1/16 (103)	3-7/8 (98)

[a] To find the corresponding flow coefficients for these port codes, refer to "Port Codes for TAC DuraDrive Ball Valve Assemblies" on page 6.

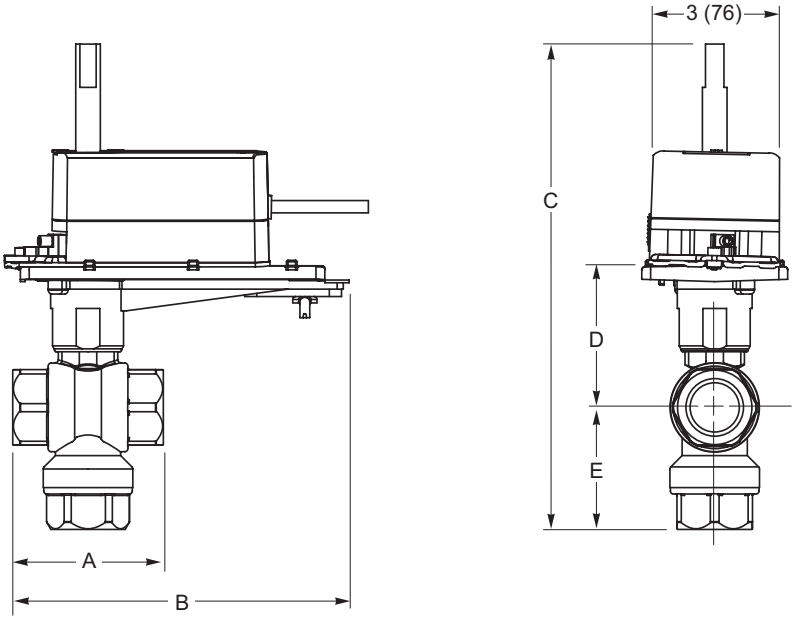

Figure-2 Mx41-6043 or Mx41-6083 with 3-Way Ball Valve.

Copyright 2006 TAC All Rights Reserved.

Valve Assemblies with MF4D-608x and MS4D-608x Non-Spring Return TAC DuraDrive Actuators

Actuator Specifications

Inputs

Control Signal and Power Requirements

All 24 Vac circuits are Class 2

Part Number	Control Signal	Voltage	Actuator Power Input			
			Running			Holding
			50/60 Hz		DC Amps	50/60 Hz
			VA	W		W
MF4D-6083-000	Floating	24 Vac ±20% or 20 to 30 Vdc	5.9	3.6	0.13	1.6
MF4D-6083-100						
MS4D-6083-000	2 to 10 Vdc[a] Proportional		5.2	2.7	0.10	1.4
MS4D-6083-100						
MS4D-6083-020	0 to 3 Vdc Proportional					
MS4D-6083-120						
MS4D-6083-030	6 to 9 Vdc Proportional					
MS4D-6083-130						
MS4D-6083-050	2 to 10 Vdc Proportional					
MS4D-6083-150						
MS4D-6083-060	4 to 20 mAdc Proportional					
MS4D-6083-160						

[a] 4 to 20 mAdc with field-installed 500 Ω resistor.

Connections

Mx4D-6083-0x0: 3 ft. (0.9 m) long, appliance cable, 1/2 in. (13 mm) conduit connector. For M20 Metric conduit, use AM-756 adaptor.

Mx4D-6083-1x0: 10 ft. (3.05 m) long, plenum cable, 1/2 in. (13 mm) conduit connector. For M20 Metric conduit, use AM-756 adaptor.

Motor Type

Brush DC.

Outputs

Electrical

Timing: Approx. 85 sec. at 70 °F (21 °C), measured with no load applied to actuator.

Position Feedback Voltage: For 0 to 3 Vdc, 6 to 9 Vdc, and 2 to 10 Vdc proportional actuators, the feedback signal is the same voltage range as the input signal. The 4 to 20 mA proportional actuators and floating actuators have a 2 to 10 Vdc feedback signal. The feedback signal can supply up to 0.5 mA to operate up to four additional slave actuators.

Mechanical

Stroke: 93° nominal.

Manual Override: Allows positioning of valve shaft, using a manual crank.

Output torque rating: 70 lb-in (6.6 N-m).

RA/DA Jumper (Proportional Models): Permits selection of reverse acting or direct acting control.

Position indicator: Visual indicator.

Environment

Temperature Limits

Shipping and storage: -40 to 160 °F (-40 to 71 °C) ambient.

Operating: -22 to 140 °F (-30 to 60 °C) ambient.

Humidity

15 to 95% RH, non-condensing.

Locations

NEMA 1. NEMA 2, UL Type 2 (IEC IP54) with customer-supplied watertight conduit connectors. Enclosure is air plenum rated.

Agency Listings (Actuator)

UL

UL 873, Underwriters Laboratories (File #9429 Category Temperature-Indicating and Regulating Equipment). Plenum rated.

European Community

EMC Directive (89/336/EEC). Low Voltage Directive (72/23/EEC). This product fits into Installation Category (Overvoltage Category) II per EN 61010-1.

cUL

Canadian Standards C22.2 No. 24-93.

Australia

This product meets requirements to bear the C-Tick Mark according to the terms specified by the Communications Authority under the Radiocommunications Act 1992.

Copyright 2006 TAC All Rights Reserved.

2-Way Ball Valve Assembly Dimensions

Valve Assembly Part Number	Valve Size in.	P Code [a]	Valve Dimensions in inches (millimetres) (Refer to Figure-3)			
			A	B	C	D
2-Way VF-2213-841-9-P VS-2213-841-9-P thru VS-2213-849-9-P	1/2	1, 2, 3, 4, 5, 7	2-3/8 (60)	6-7/8 (175)	8 (203)	2-3/4 (69)
		6	3-11/32 (85)	7 (178)	8-3/16 (208)	2-7/8 (72)
	3/4	11, 12, 13, 14, 15, 17	2-5/8 (67)	6-7/16 (163)	8 (203)	2-3/4 (69)
		16, 18	2-5/8 (67)	6-5/8 (168)	8-3/16 (208)	2-7/8 (72)
	1	21, 23	3-1/16 (78)	7 (178)	8-1/2 (216)	3 (76)
		22, 25	3-3/4 (95)	7-3/8 (188)	8-3/16 (208)	2-7/8 (72)
		24, 26	4-5/16 (110)	7-5/8 (194)	9-1/8 (231)	3-1/4 (82)
		27	3-1/16 (78)	7-13/16 (200)	8-1/2 (216)	3 (76)
	1-1/4	41, 42, 43, 45	3 (76)	5-13/32 (112)	8-7/16 (215)	3-1/8 (79)
		44, 46	3-5/8 (92)	7-3/32 (180)	9-1/8 (231)	3-1/4 (82)
	1-1/2	51, 53	4-11/16 (119)	7-13/16 (198)	9-1/8 (231)	3-1/4 (82)
		52, 54	4-1/16 (103)	7-11/32 (186)	9-5/8 (244)	3-3/4 (95)
	2	61, 65	4-21/32 (118)	7-3/4 (196)	9-5/8 (244)	3-3/4 (95)
		63, 66, 67	4-15/16 (125)	7-5/8 (195)	10-3/8 (264)	4-1/16 (103)
	2-1/2	71, 72, 76, 73, 74, 75	4-3/4 (121)	7-7/8 (200)	10-3/8 (264)	4-1/16 (103)
	3	82, 85	5-1/16 (129)	8 (203)	10-9/16 (268)	4-1/16 (103)

[a] To find the corresponding flow coefficients for these port codes, refer to "Port Codes for TAC DuraDrive Ball Valve Assemblies" on page 6.

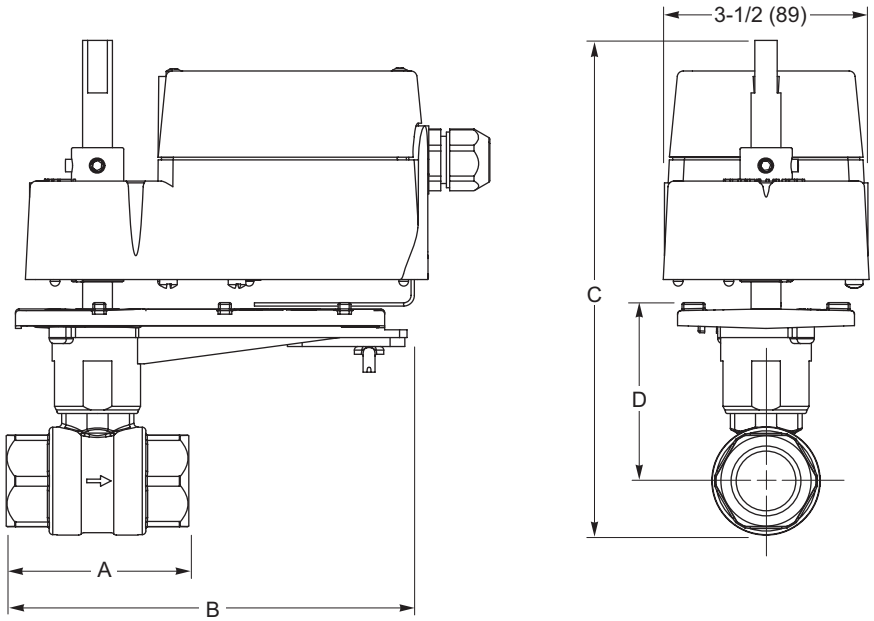

Figure-3 MF4D-608x, MS4D-608x with 2-Way Ball Valve.

Copyright 2006 TAC All Rights Reserved.

3-Way Ball Valve Assembly Dimensions							
Valve Assembly Part Number	Valve Size in.	P Code [a]	Valve Dimensions in inches (millimetres) (Refer to Figure-4)				
			A	B	C	D	E
3-Way VF-2313-841-9-P VS-2313-841-9-P thru VS-2313-849-9-P	1/2	1, 2, 3, 4, 5, 6	2-5/8 (67)	6-3/4 (171)	9-5/16 (237)	2-7/8 (72)	2 (51)
	3/4	11, 12, 13, 14, 15, 16	2-5/8 (67)	6-7/8 (175)	9-5/16 (237)	2-7/8 (72)	2 (51)
	1	21, 22, 23, 24, 25, 28	3-3/4 (95)	7-1/2 (191)	9-1/2 (238)	2-7/8 (72)	2-1/16 (52)
		27, 30	3-1/16 (78)	7 (178)	9-7/8 (251)	3 (76)	2-7/16 (62)
		26, 29, 31	4-5/16 (110)	7 (178)	10-7/8 (275)	3-1/4 (82)	3-1/8 (80)
	1-1/4	45	3 (76)	7 (178)	9-7/8 (251)	3 (76)	2-7/16 (61)
		41, 43, 44, 46	3-5/8 (92)	7-3/8 (188)	10-1/2 (267)	3-1/4 (82)	2-13/16 (72)
	1-1/2	51, 52, 53, 55	4-1/2 (114)	7-3/4 (197)	10-3/8 (264)	3-1/4 (82)	2-3/4 (69)
		54, 56	4-1/16 (103)	7-1/4 (184)	11-3/8 (288)	3-3/4 (95)	3-3/16 (81)
	2	61, 63	3-15/16 (100)	8-7/16 (214)	11-1/4 (287)	3-3/4 (95)	3-1/8 (79)
		62, 64	5 (127)	7-1/2 (191)	12-1/4 (314)	4-1/16 (103)	3-7/8 (98)

[a] To find the corresponding flow coefficients for these port codes, refer to "Port Codes for TAC DuraDrive Ball Valve Assemblies" on page 6.

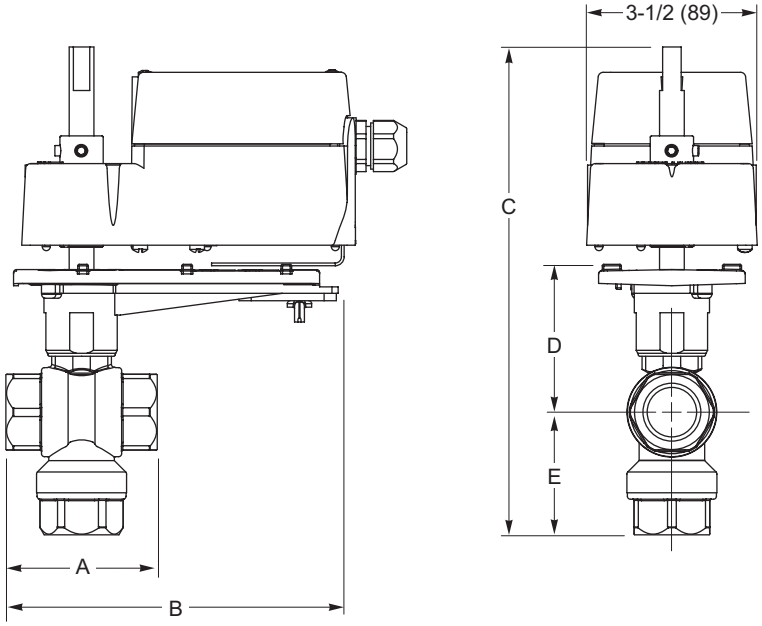

Figure-4 MF4D-608x, MS4D-608x with 3-Way Ball Valve.

Copyright 2006 TAC All Rights Reserved.

Valve Assemblies with MF4E-60830-100 Non-Spring Return TAC DuraDrive Actuators

Note: The MF4E-60830-100 is the only MF4E series TAC DuraDrive model actuator used in the TAC Ball Valve Assemblies.

Actuator Specifications	
Inputs	
Control Signal	Floating point control, 24 Vac +20% / -15%.
Power Requirements	All 24 Vac circuits are Class 2.

Part Number	Voltage 50/60 Hz	Running		
		VA		Watts
		50 Hz	60 Hz	
MF4E-60830-100	24 Vac +20% / -15%	1.0	1.0	1.0

Connections	10 ft. (3.05 m) long, plenum cable.
Motor Type	Synchronous.
Outputs	
Electrical	**Timing:** Approx. 90 sec. at 60 Hz, 108 sec. at 50 Hz, for 90° stroke at 70 °F (21 °C).
Mechanical	**Stroke:** 95°. Stroke limit is adjustable, 0° to 95°, in both clockwise (CW) and counterclockwise (CCW) directions.
	Manual Override: Allows free shaft rotation to any position from 0° to 95°.
	Output torque rating: 70 lb-in (6.6 N-m).
	Position indicator: Visual indicator.
Environment	
Temperature Limits	**Shipping and storage:** -40 to 160 °F (-40 to 71 °C) ambient. **Operating:** -22 to 140 °F (-30 to 60 °C) ambient.
Humidity	5 to 95% RH, non-condensing.
Locations	NEMA Type 1 (IEC IP30).
Agency Listings (Actuator)	
UL	UL 873, Underwriters Laboratories (File #9429 Category Temperature-Indicating and Regulating Equipment). Plenum rated.
European Community	EMC Directive EN 61326.
cUL	Canadian Standards C22.2 No. 24-93.
Australia	This product meets requirements to bear the C-Tick Mark according to the terms specified by the Communications Authority under the Radiocommunications Act 1992.

Copyright 2006 TAC All Rights Reserved.

2-Way Ball Valve Assembly Dimensions

Valve Assembly Part Number	Valve Size in.	P Code [a]	Valve Dimensions in inches (millimetres) (Refer to Figure-5)			
			A	B	C	D
2-Way VF-2213-880-9-P	1/2	1, 2, 3, 4, 5, 7	2-3/8 (60)	7-1/8 (181)	8 (203)	2-3/4 (69)
		6	3-11/32 (85)	6-7/8 (175)	8-3/16 (208)	2-7/8 (72)
	3/4	11, 12, 13, 14, 15, 17	2-3/8 (60)	7 (170)	8 (203)	2-3/4 (69)
		16, 18	2-5/8 (67)	7 (170)	8-3/16 (208)	2-7/8 (72)
	1	21, 23	3-1/16 (78)	7-1/4 (184)	8-1/2 (216)	3 (76)
		22, 25	3-3/4 (95)	7-9/16 (192)	8-3/16 (208)	2-7/8 (72)
		24, 26	4-5/16 (110)	7-7/8 (200)	9-1/8 (231)	3-1/4 (82)
		27	3-1/16 (78)	8 (203)	8-1/2 (216)	3 (76)
	1-1/4	41, 42, 43, 45	3 (76)	7-1/4 (184)	8-7/16 (215)	3-1/8 (79)
		44, 46	3-5/8 (92)	7-1/4 (184)	9-1/8 (231)	3-1/4 (82)
	1-1/2	51, 53	4-11/16 (119)	7-9/16 (192)	9-1/8 (231)	3-1/4 (82)
		52, 54	4-1/16 (103)	7-1/16 (179)	9-5/8 (244)	3-3/4 (95)
	2	61, 65	4-21/32 (118)	7-1/2 (191)	9-5/8 (244)	3-3/4 (95)
		63, 66, 67	4-15/16 (125)	7-7/16 (189)	10-3/8 (264)	4-1/16 (103)
	2-1/2	71, 72, 76, 73, 74, 75	4-3/4 (121)	7-9/16 (192)	10-3/8 (264)	4-1/16 (103)
	3	82, 85	5-1/16 (129)	7-3/4 (197)	10-9/16 (268)	4-1/16 (103)

[a] To find the corresponding flow coefficients for these port codes, refer to "Port Codes for TAC DuraDrive Ball Valve Assemblies" on page 6.

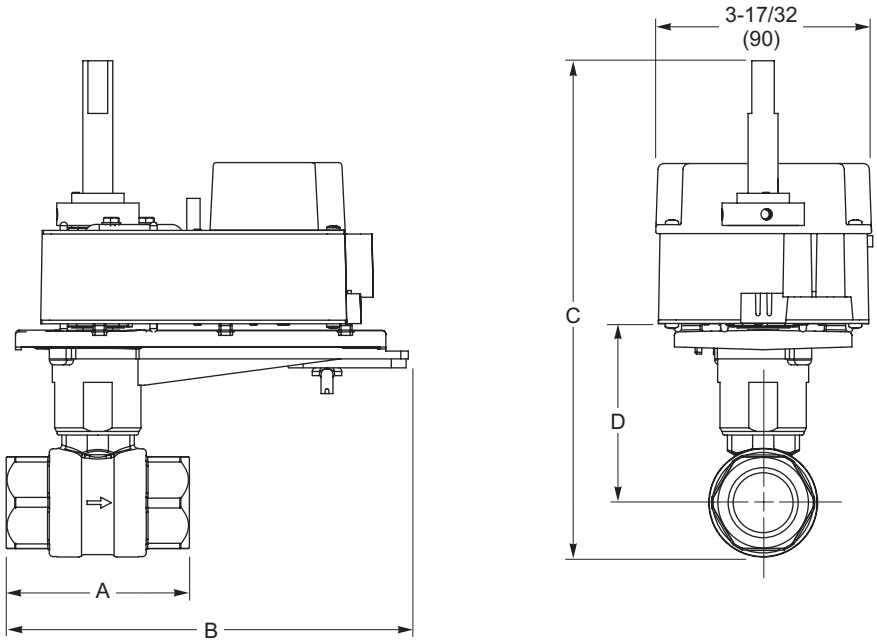

Figure-5 MF4E-60830-100 with 2-Way Ball Valve.

Copyright 2006 TAC All Rights Reserved.

3-Way Ball Valve Assembly Dimensions							
Valve Assembly Part Number	Valve Size in.	P Code [a]	Valve Dimensions in inches (millimetres) (Refer to Figure-6)				
			A	B	C	D	E
3-Way VF-2313-880-9-P	1/2	1, 2, 3, 4, 5, 6	2-5/8 (67)	7 (178)	9-5/16 (237)	2-7/8 (72)	2 (51)
	3/4	11, 12, 13, 14, 15, 16	2-5/8 (67)	7 (178)	9-5/16 (237)	2-7/8 (72)	2 (51)
	1	21, 22, 23, 24, 25, 28	3-3/4 (95)	7-11/16 (195)	9-1/2 (238)	2-7/8 (72)	2-1/16 (52)
		27, 30	3-1/16 (78)	7-1/4 (184)	9-7/8 (251)	3 (76)	2-7/16 (62)
		26, 29, 31	4-5/16 (110)	8-1/4 (210)	10-7/8 (275)	3-1/4 (82)	3-1/8 (80)
	1-1/4	45	3 (76)	6-3/4 (171)	9-7/8 (251)	3 (76)	2-7/16 (61)
		41, 43, 44, 46	3-5/8 (92)	7-5/8 (194)	10-1/2 (267)	3-1/4 (82)	2-13/16 (72)
	1-1/2	51, 52, 53, 55	4-1/2 (114)	7-3/4 (197)	10-3/8 (264)	3-1/4 (82)	2-3/4 (69)
		54, 56	4-1/16 (103)	7-1/4 (184)	11-3/8 (288)	3-3/4 (95)	3-3/16 (81)
	2	61, 63	3-15/16 (100)	7-1/8 (181)	11-1/4 (287)	3-3/4 (95)	3-1/8 (79)
		62, 64	5 (127)	7-3/4 (197)	12-1/4 (314)	4-1/16 (103)	3-7/8 (98)

[a] To find the corresponding flow coefficients for these port codes, refer to "Port Codes for TAC DuraDrive Ball Valve Assemblies" on page 6.

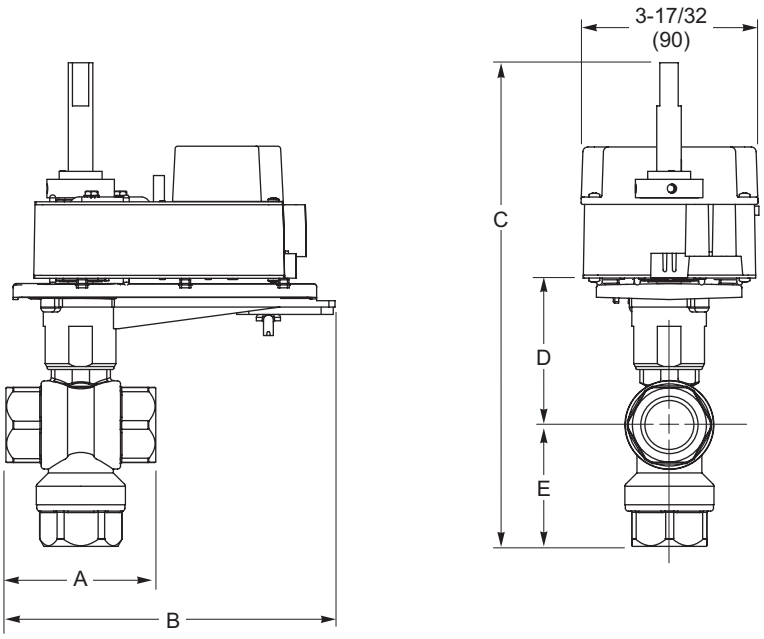

Figure-6 MF4E-60830-100 with 3-Way Ball Valve.

Copyright 2006 TAC All Rights Reserved.

Note: The Ball Valve Assemblies use the basic Mx41-6043, Mx41-6083, and Mx40-704x TAC DuraDrive actuators. Specifications for actuators containing auxiliary switches are also provided here. Ball valve assemblies using the switch-equipped actuators may be field-assembled using ball valve body/linkage assemblies (VB-2x13-500-9-xx).

Actuator Specifications

Inputs

Control Signal

MA40-704x: ON/OFF SPST control contacts or Triacs (500 mA rated)
MS40-7043: Proportional, 2 to 10Vdc or 4 to 20 mAdc with 500 Ohm resistor.
MS40-7043 MP/MP5: Proportional 6 to 9 Vdc.
MF40-7043: Floating point control, 24 Vac.

Power Requirements

All 24 Vac circuits are Class 2.

Part Number	Voltage 50/60 Hz	Voltage Vdc	Running				Holding	
			50 Hz		60 Hz		50 Hz	60 Hz
			VA	W	VA	W	W	W
MA40-7043	24 Vac ± 20%	22 to 30	4.4	2.9	4.4	2.9	0.8	0.8
MS40-7043	24 Vac ± 20%	22 to 30	5.6	4.2	5.6	4.2	2.4	2.4
MF40-7043	24 Vac ± 20%	22 to 30	5.9	4.4	5.9	4.4	2.9	2.9
MS40-7043-MP	24 Vac ± 20%	22 to 30	6.9	5.0	6.6	5.0	3.2	3.2
MS40-7043-MP5	24 Vac ± 20%	22 to 30						
MA40-7040	120 Vac ± 10%	—	6.4	3.8	4.3	3.4	1.6	1.2

Connections

MA40-704x and MA40-704x-501: 3 ft. (0.9 m) long, appliance cable, 1/2 in. conduit connector. For M20 Metric conduit, use AM-756 adaptor.
MF40-7043 and MF40-7043-501, MS40-7043 and MS40-7043-501: 3 ft. (0.9 m) long, plenum rated cable, 1/2 in. conduit connector. For M20 Metric conduit, use AM-756 adaptor.

Motor Type

MA40-704x: Brush DC.
MF40-7043, MS40-7043: Brushless DC.

Outputs

Electrical

Auxiliary Switches: Available when actuators are ordered as separate units. Auxiliary switches are not offered with factory ball valve assemblies.

Mx40-7043-501 and MS40-7043-MP5
One auxiliary switch available. SPDT 6 A resistive @ 24 Vac, adjustable 0 to 95° (0 to 1 scale). Switch meets VDE requirements for 6 (1.5) A, 24 Vac.

MA40-7040-501
One auxiliary switch available. SPDT 6 A resistive @ 250 Vac, adjustable 0 to 95° (0 to 1 scale). Switch meets VDE requirements for 6 (1.5) A, 250 Vac.

Position Feedback Voltage: 2 to 10 Vdc (maximum 0.7 mA) output signal for position feedback or operation of up to four slave actuators.
Control Mode: Switch provided for selection of direct acting or reverse acting control mode on proportional models.
Timing: MA-704x — Approx. 50 sec.; MF- and MS-7043 — Approx. 130 sec.
Auxiliary Power Supply: MS40-7043-MP and MS40-7043-MP5 — +20 Vdc @ 25 mA (max.)

Mechanical

Stroke: Angle of rotation is limited to a maximum of 95°, with mechanical stop.

Output torque rating: Mx40-704x — 35 lb-in (4 N-m)

Position indicator: Visual scale numbered from 0 to 90°, provided for position indication.

Environment

Temperature Limits

Shipping and storage: -40 to 160 °F (-40 to 71 °C) ambient.
Operating: -22 to 140 °F (-30 to 60 °C) ambient.

Humidity

5 to 95% RH, non-condensing.

Locations

NEMA Type 2 (IEC IP54)

Agency Listings (Actuator)

UL

UL 873, Underwriters Laboratories (File #9429 Category Temperature-Indicating and Regulating Equipment).

European Community

EMC Directive (89/336/EEC). Low Voltage Directive (72/23/EEC).

cUL

Canadian Standards C22.2 No. 24.

Australia

This product meets requirements to bear the C-Tick Mark according to the terms specified by the Communications Authority under the Radiocommunications Act 1992.

Copyright 2006 TAC All Rights Reserved.

2-Way Ball Valve Assembly Dimensions

Valve Assembly Part Number	Valve Size in.	P Code [a]	Valve Dimensions in inches (millimetres) (Refer to Figure-7)			
			A	B	C	D
2-Way VA-2213-522-9-P VA-2213-526-9-P VA-2213-532-9-P VA-2213-536-9-P VF-2213-526-9-P VF-2213-536-9-P VS-2213-526-9-P VS-2213-536-9-P	1/2	1, 2, 3, 4, 5, 7	2-3/8 (60)	7-1/8 (181)	8 (203)	2-3/4 (69)
		6	3-11/32 (85)	7-3/8 (187)	8-3/16 (208)	2-7/8 (72)
	3/4	11, 12, 13, 14, 15, 17	2-3/8 (60)	7 (170)	8 (203)	2-3/4 (69)
		16, 18	2-5/8 (67)	7 (170)	8-3/16 (208)	2-7/8 (72)
	1	21, 23	3-1/16 (78)	7-1/4 (184)	8-1/2 (216)	3 (76)
		22, 25	3-3/4 (95)	7-9/16 (192)	8-3/16 (208)	2-7/8 (72)
		24, 26	4-5/16 (110)	7-7/8 (200)	9-1/8 (231)	3-1/4 (82)
		27	3-1/16 (78)	8 (203)	8-1/2 (216)	3 (76)
	1-1/4	41, 42, 43, 45	3 (76)	7-1/4 (184)	8-7/16 (215)	3-1/8 (79)
		44, 46	3-5/8 (92)	7-1/4 (184)	9-1/8 (231)	3-1/4 (82)
	1-1/2	51, 53	4-11/16 (119)	8-1/16 (205)	9-1/8 (231)	3-1/4 (82)
		52, 54	4-1/16 (103)	7-1/2 (190)	9-5/8 (244)	3-3/4 (95)
	2	61, 65	4-21/32 (118)	8 (203)	9-5/8 (244)	3-3/4 (95)
		63, 66, 67	4-15/16 (125)	7-7/8 (200)	10-3/8 (264)	4-1/16 (103)
	2-1/2	71, 72, 76, 73, 74, 75	4-3/4 (121)	8 (203)	10-3/8 (264)	4-1/16 (103)
	3	82, 85	5-1/16 (129)	8-1/4 (210)	10-9/16 (268)	4-1/16 (103)

[a] To find the corresponding flow coefficients for these port codes, refer to "Port Codes for TAC DuraDrive Ball Valve Assemblies" on page 6.

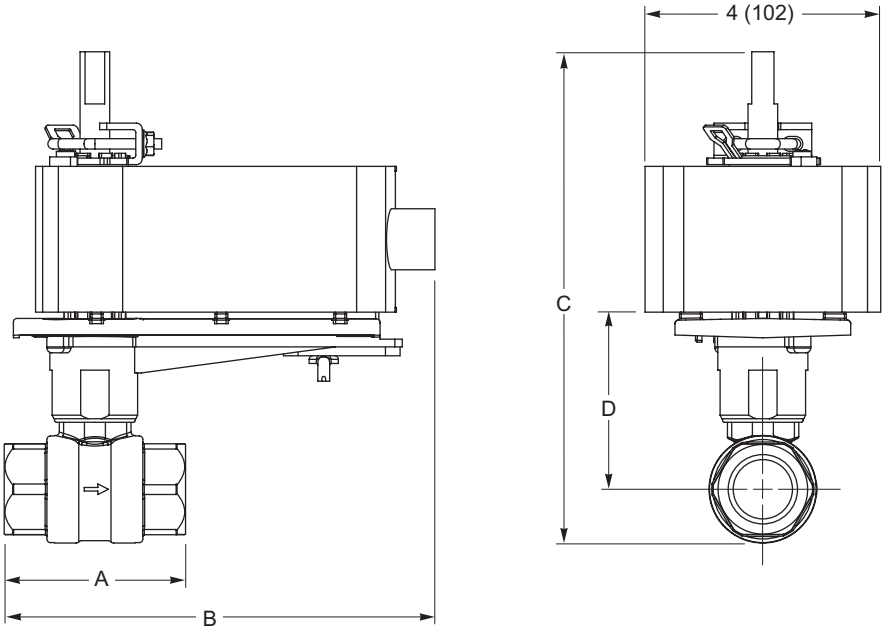

Figure-7 Mx40-704x with 2-Way Ball Valve.

Copyright 2006 TAC All Rights Reserved.

3-Way Ball Valve Assembly Dimensions							
Valve Assembly Part Number	Valve Size in.	P Code [a]	Valve Dimensions in inches (millimetres) (Refer to Figure-8)				
			A	B	C	D	E
3-Way VA-2313-526-9-P VA-2313-536-9-P VF-2313-526-9-P VF-2313-536-9-P VS-2313-526-9-P VS-2313-536-9-P	1/2	1, 2, 3, 4, 5, 6	2-5/8 (67)	7 (178)	9-5/16 (237)	2-7/8 (72)	2 (51)
	3/4	11, 12, 13, 14, 15, 16	2-5/8 (67)	7 (178)	9-5/16 (237)	2-7/8 (72)	2 (51)
	1	21, 22, 23, 24, 25, 28	3-3/4 (95)	7-11/16 (195)	9-1/2 (238)	2-7/8 (72)	2-1/16 (52)
		27, 30	3-1/16 (78)	7-1/4 (184)	9-7/8 (251)	3 (76)	2-7/16 (62)
		26, 29, 31	4-5/16 (110)	8-1/4 (210)	10-7/8 (275)	3-1/4 (82)	3-1/8 (80)
	1-1/4	45	3 (76)	7-1/4 (184)	9-7/8 (251)	3 (76)	2-7/16 (61)
		41, 43, 44, 46	3-5/8 (92)	7-5/8 (194)	10-1/2 (267)	3-1/4 (82)	2-13/16 (72)
	1-1/2	51, 52, 53, 55	4-1/2 (114)	8-1/4 (210)	10-3/8 (264)	3-1/4 (82)	2-3/4 (69)
		54, 56	4-1/16 (103)	7-1/16 (179)	11-3/8 (288)	3-3/4 (95)	3-3/16 (81)
	2	61, 63	3-15/16 (100)	7-9/16 (192)	11-1/4 (287)	3-3/4 (95)	3-1/8 (79)
		62, 64	5 (127)	8-1/4 (210)	12-1/4 (314)	4-1/16 (103)	3-7/8 (98)

[a] To find the corresponding flow coefficients for these port codes, refer to "Port Codes for TAC DuraDrive Ball Valve Assemblies" on page 6.

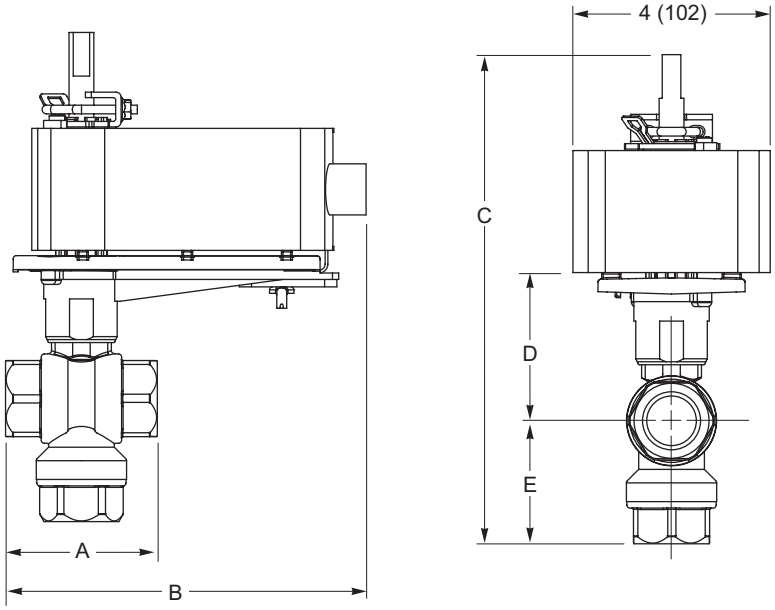

Figure-8 Mx40-704x with 3-Way Ball Valve.

Copyright 2006 TAC All Rights Reserved.

Valve Assemblies with Mx4D-703x and Mx4D-803x Spring Return TAC DuraDrive Actuators

Actuator Specifications

Inputs

Control Signal and Power Requirements

All 24 Vac circuits are Class 2. All circuits 30 Vac and above are Class 1.

Part Number for Mx4D-703x-xxx Mx4D-803x-xxx	Control Signal	Voltage	Actuator Power Input			
			Running			Holding
			50/60 Hz		DC Amps	50/60 Hz
			VA	W		W
MA4D-x033-000	2 Position SPST	24 Vac ±20% or 20 to 30 Vdc	5.1	3.6	0.14	1.3
MA4D-x033-100						
MA4D-x030-000		120 Vac ±10% 50/60 Hz	7.8	5.0	—	2.5
MA4D-x031-000		230 Vac ±10% 50/60 Hz	7.2	5.2	—	2.4
MF4D-x033-000	Floating	24 Vac ±20% or 20 to 30 Vdc	6.8	4.2	0.15	1.9
MF4D-x033-100						
MS4D-x033-000	2 to 10 Vdc[a] Proportional		6.1	3.4	0.12	1.4
MS4D-x033-100						
MS4D-x033-020	0 to 3 Vdc Proportional					
MS4D-x033-120						
MS4D-x033-030	6 to 9 Vdc Proportional					
MS4D-x033-130						
MS4D-x033-050	0 to 10 Vdc Proportional					
MS4D-x033-150						
MS4D-x033-060	4 to 20 mAdc Proportional					
MS4D-x033-160						

[a] 4 to 20 mAdc with field-installed 500 Ω resistor.

Connections

Mx4D-703x-0x0 and Mx4D-803x-0x0: 3 ft. (0.9 m) long, appliance cable, 1/2 in. (13 mm) conduit connector. For M20 Metric conduit, use AM-756 adaptor.
Mx4D-703x-1x0 and Mx4D-803x-1x0: 10 ft. (3.05 m) long, plenum cable, 1/2 in. (13 mm) conduit connector. For M20 Metric conduit, use AM-756 adaptor.

Motor Type

Brush DC.

Outputs

Electrical

Timing:

Part Number	Approx. Timing in Sec. @ 70 °F (21 °C)[a]		
	Powered	Spring Return	
		CCW[b]	CW[b]
MA4D-703x	56	26	—
MF4D-703x MS4D-703x	85	21	—
MA4D-803x	56	—	26
MF4D-803x MS4D-803x	85	—	21

[a] Timing was measured with no load applied to actuator.
[b] CCW or CW as viewed from cover side of actuator.

Position Feedback Voltage: For 0 to 3 Vdc, 0 to 9 Vdc, and 0 to 10 Vdc proportional actuators, the feedback signal is the same voltage range as the input signal. The 4 to 20 mA proportional actuators and floating actuators have a 2 to 10 Vdc feedback signal. The feedback signal can supply up to 0.5 mA to operate up to four additional slave actuators.

Mechanical

Stroke: 93° nominal.

Manual Override: Allows positioning of valve shaft, using a manual crank.

Output torque rating: 30 lb-in (3.4 N-m).

RA/DA Jumper (Proportional Models): Permits selection of reverse acting or direct acting control.

Position indicator: Visual indicator.

Copyright 2006 TAC All Rights Reserved.

Actuator Specifications (Continued)	
Environment	
Temperature Limits	**Shipping and storage:** -40 to 160 °F (-40 to 71 °C) ambient. **Operating:** -22 to 140 °F (-30 to 60 °C) ambient.
Humidity	15 to 95% RH, non-condensing.
Locations	NEMA 1. NEMA 2, UL Type 2 (IEC IP54) with customer-supplied watertight conduit connectors. Enclosure is air plenum rated.
Agency Listings (Actuator)	
UL	UL 873, Underwriters Laboratories (File #9429 Category Temperature-Indicating and Regulating Equipment). Plenum rated.
European Community	EMC Directive (89/336/EEC). Low Voltage Directive (72/23/EEC). This product fits into Installation Category (Overvoltage Category) II per EN 61010-1.
cUL	Canadian Standards C22.2 No. 24-93.
Australia	This product meets requirements to bear the C-Tick Mark according to the terms specified by the Communications Authority under the Radiocommunications Act 1992.

2-Way Ball Valve Assembly Dimensions

Valve Assembly Part Number	Valve Size in.	P Code [a]	Valve Dimensions in inches (millimetres) (Refer to Figure-9)			
			A	B	C	D
2-Way VA-2213-815-9-P thru VA-2213-818-9-P VA-2213-821-9-P VA-2213-831-9-P VF-2213-821-9-P VF-2213-831-9-P VS-2213-821-9-P thru VS-2213-839-9-P	1/2	1, 2, 3, 4, 5, 7	2-3/8 (60)	6-7/8 (175)	8 (203)	2-3/4 (69)
		6	3-11/32 (85)	7 (178)	8-3/16 (208)	2-7/8 (72)
	3/4	11, 12, 13, 14, 15, 17	2-5/8 (67)	6-7/16 (163)	8 (203)	2-3/4 (69)
		16, 18	2-5/8 (67)	6-5/8 (168)	8-3/16 (208)	2-7/8 (72)
	1	21, 23	3-1/16 (78)	7 (178)	8-1/2 (216)	3 (76)
		22, 25	3-3/4 (95)	7-3/8 (188)	8-3/16 (208)	2-7/8 (72)
		24, 26	4-5/16 (110)	7-5/8 (194)	9-1/8 (231)	3-1/4 (82)
		27	3-1/16 (78)	7-13/16 (200)	8-1/2 (216)	3 (76)

[a] To find the corresponding flow coefficients for these port codes, refer to "Port Codes for TAC DuraDrive Ball Valve Assemblies" on page 6.

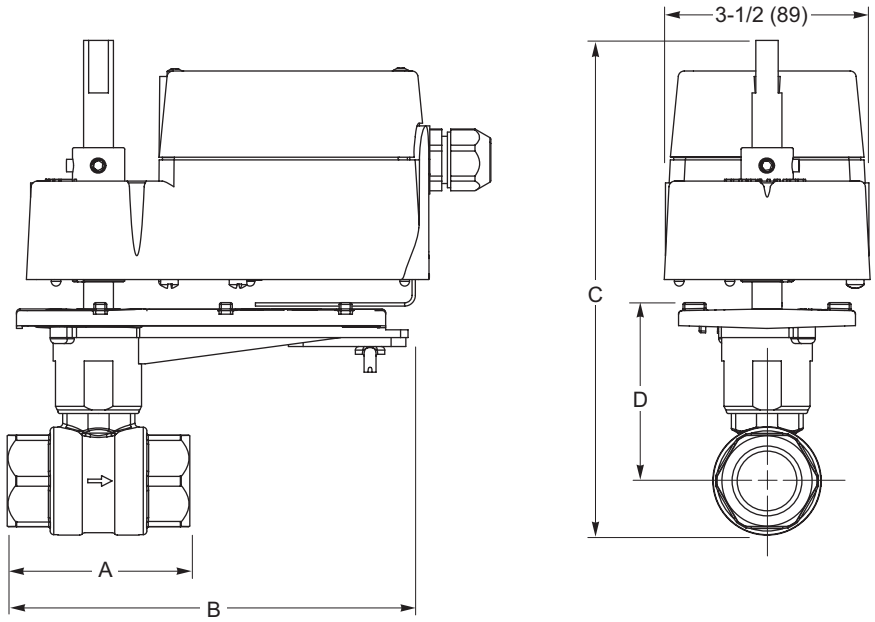

Figure-9 MA4D-703x, MF4D-703x, MS4D-703x, MA4D-803x, MF4D-803x, or MS4D-803x with 2-Way Ball Valve.

Copyright 2006 TAC All Rights Reserved.

3-Way Ball Valve Assembly Dimensions							
Valve Assembly Part Number	Valve Size in.	P Code [a]	Valve Dimensions in inches (millimetres) (Refer to Figure-10)				
			A	B	C	D	E
3-Way VA-2313-815-9-P thru VA-2313-818-9-P VA-2313-821-9-P VA-2313-831-9-P VF-2313-821-9-P VF-2313-831-9-P VS-2313-821-9-P thru VS-2313-839-9-P	1/2	1, 2, 3, 4, 5, 6	2-5/8 (67)	6-3/4 (171)	9-5/16 (237)	2-7/8 (72)	2 (51)
	3/4	11, 12, 13, 14, 15, 16	2-5/8 (67)	6-7/8 (175)	9-5/16 (237)	2-7/8 (72)	2 (51)
	1	21, 22, 23, 24, 25, 28	3-3/4 (95)	7-1/2 (191)	9-1/2 (238)	2-7/8 (72)	2-1/16 (52)
		27, 30	3-1/16 (78)	7 (178)	9-7/8 (251)	3 (76)	2-7/16 (62)
		26, 29, 31	4-5/16 (110)	7 (178)	10-7/8 (275)	3-1/4 (82)	3-1/8 (80)

[a] To find the corresponding flow coefficients for these port codes, refer to "Port Codes for TAC DuraDrive Ball Valve Assemblies" on page 6.

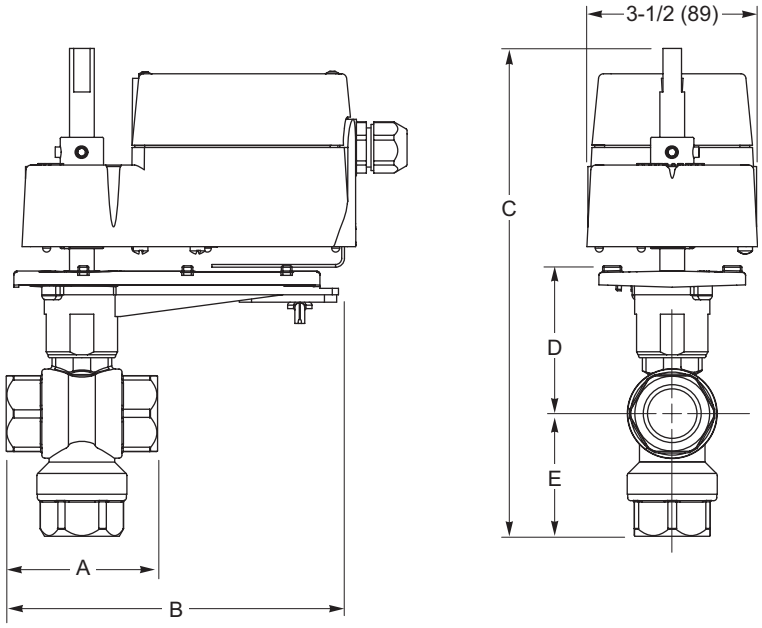

Figure-10 MA4D-703x, MF4D-703x, MS4D-703x, MA4D-803x, MF4D-803x, or MS4D-803x with 3-Way Ball Valve.

Copyright 2006 TAC All Rights Reserved.

Installation Considerations

Mounting Angle of Valve Assembly

Be sure to allow the necessary clearance around the valve assembly. The valve assembly must be mounted so that the actuator is horizontally even with, or above, the valve. This ensures that any condensate that forms on the valve body will not travel into the actuator, where it may cause corrosion or electrical malfunction. See *Vx-2x13-5xx-9-xx Series Ball Valve Assembly Installation Instructions,* F-27087 or *Mx4D-xxxxSeries TAC DuraDrive Rotary Overshaft Actuators General Instructions,* F-27170.

Piping

Figure-11 and Figure-12 illustrate 2-way and 3-way ball valve assembly piping.

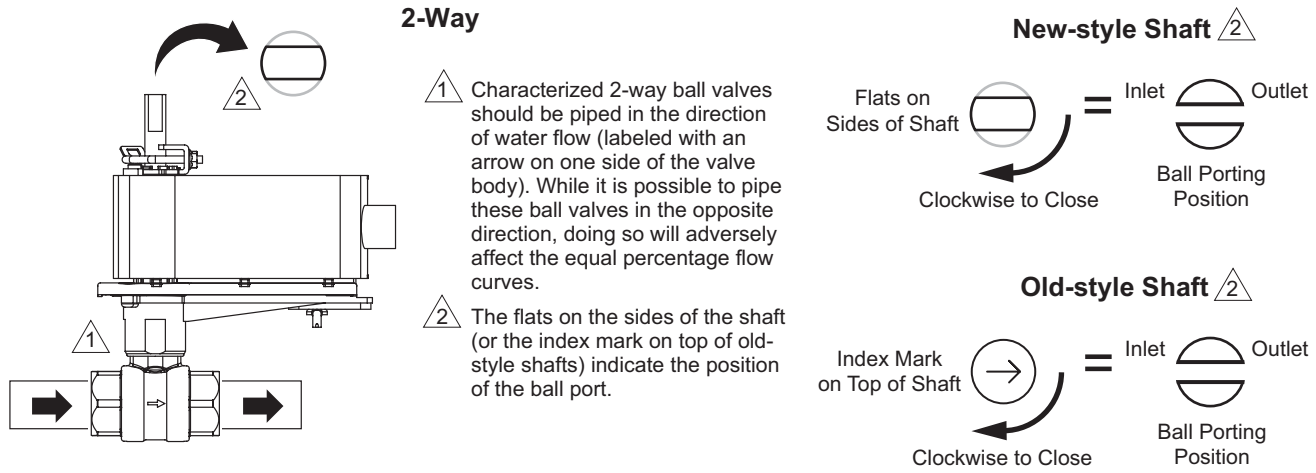

Figure-11 2-Way Valve Assemblies Piping Diagram.

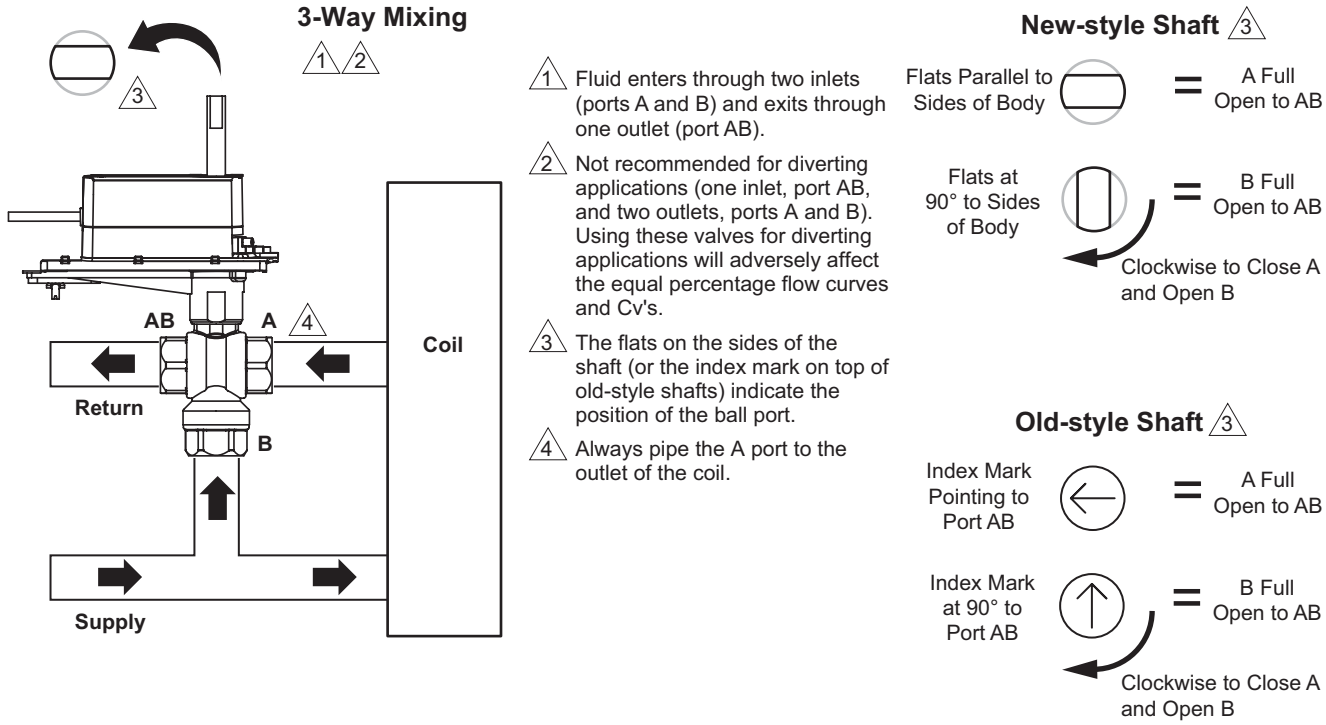

Figure-12 3-Way Mixing Valve Assemblies Piping Diagram.

Copyright 2006 TAC All Rights Reserved.

Insulation of Ball Valve Assembly

The ball valve should be completely insulated to minimize the effect of heat transfer and condensation at the actuator.

Caution: The actuator itself must not be insulated. Doing so can result in excess heat or condensation within the actuator.

Temperature Limits for Ball Valve Assembly

When installing the ball valve assembly, observe the minimum and maximum temperature limits. Refer to the valve and actuator specifications on pages 7, 12, 15, 18, 21, and 24.

Water System Maintenance

All heating and cooling systems are susceptible to valve and system problems caused by improper water treatment and system storage procedures. Durability of valve stems and packings is dependent on maintaining non-damaging water conditions. Inadequate water treatment or filtration, not in accordance with chemical supplier or ASHRAE handbook recommendations, can result in corrosion, scale, and abrasive particle formation. Scale and particulates can cause scratches in the stem and packing, and can adversely affect packing life and other parts of the hydronic system. Consult *EN-205, Water System Guidelines Engineering Information,* F-26080, for futher details.

Sizing and Selection

Flow Coefficient (Cv)

When sizing a valve, you must select a flow coefficient (Cv), which is defined as the flow rate in gallons per minute (GPM) of 60 °F water that will pass through the fully open valve with a 1 psi pressure drop (ΔP). It is calculated according to this formula:

$C_v = \frac{gpm}{\sqrt{\Delta P}}$, where ΔP is measured in psi.

Since the flow rate through the heat exchanger is usually specified, the only variable normally available in sizing a valve is the pressure drop. The following information in this section can be used to determine what pressure drop to use in calculating a valve Cv. Once you have calculated the Cv, consult Table-2 to select the valve body having the nearest available Cv.

Note: Metric equivalent.

- The metric measure of flow coefficient is k_{vs}, which is calculated according to the formula: $k_{vs} = \frac{m^3/h}{\sqrt{\Delta P}}$ (where ΔP is measured in bar; 1 bar = 100 kPa).
- If the C_v is already known, it may be converted directly to its k_{vs} equivalent: $k_{vs} = \frac{C_v}{1.156}$.

Two-position Control

Two-position control valves are normally selected “line size” to keep pressure drop at a minimum. If it is desirable to reduce the valve below line size, then 10% of “available pressure” (that is, the pump pressure differential available between supply and return mains, with design flow at the valve location) is normally used to select the valve.

Copyright 2006 TAC All Rights Reserved.

Flow Characterization for Proportional and Floating Control

The Vx-2x13-xxx-9-xx series ball valve assemblies provide equal percentage flow, which is achieved with a flow characterizing insert (Figure-13). The parabolic shape of the orifice allows a gradual change in flow, so that equal movements of the valve stem, at any point of the flow range, change the existing flow an equal percentage, regardless of the flow rate. As shown in the graph in Figure-14, a ball valve equipped with the flow insert mirrors the flow characteristic of the coil, resulting in linear heat transfer.

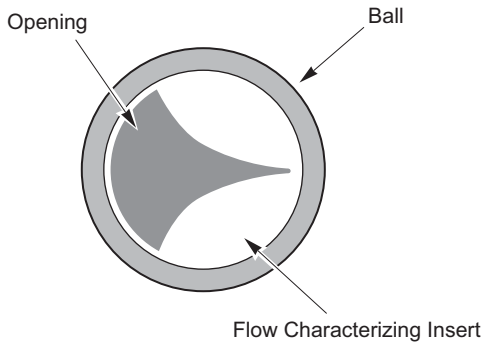

Figure-13 Flow Characterizing Insert

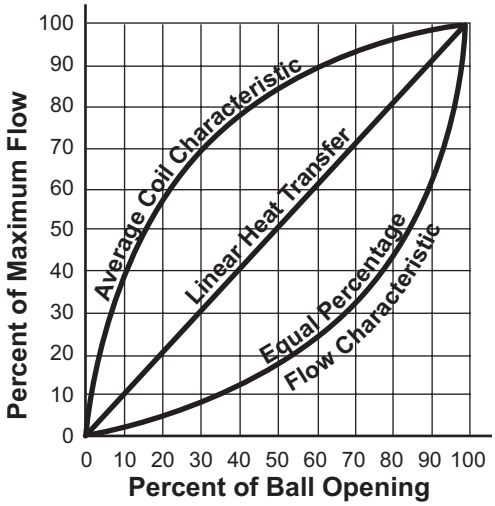

Figure-14 Equal Percentage Flow Control

Proportional control valves are usually selected to take a pressure drop equal to at least 50% of the "available pressure." As "available pressure" is often difficult to calculate, the normal procedure is to select the valve using a pressure drop at least equal to the drop in the coil or other load being controlled (except where small booster pumps are used) with a minimum recommended pressure drop of 5 psi (34 kPa). When the design temperature drop is less than 60 °F (33 °C) for conventional heating systems, higher pressure drops across the valve are needed for good results (Table-8).

Table-8 Conventional Heating System.

Design Temperature Load Drop °F (°C)	Recommended Pressure Drop (% of Available Pressure)	Multiplier on Load Drop
60 (33) or More	50%	1 x Load Drop
40 (22)	66%	2 x Load Drop
20 (11)	75%	3 x Load Drop

Secondary Circuits with Small Booster Pumps: 50% of available pressure difference (equal to the drop through load, or 50% of the booster pump head).

3-Way Mixing Valves

3-way mixing valves used in variable flow applications (Figure-12) should be sized using the preceding guidelines. 3-way mixing valves used in constant flow applications (e.g. boiler bypass) should be sized to use 20% of "available pressure," or equal to 25% of the pressure drop through the load at full flow.

Copyright 2006 TAC All Rights Reserved.

Cavitation Limitations on Valve Pressure Drop

A valve selected with too high a pressure drop can cause erosion and/or wire drawing of the flow characterizing insert. In addition, cavitation can cause noise, damage to the valve trim (and possibly the body), and choke the flow through the valve.

Do not exceed the maximum differential pressure (pressure drop) for the valve selected. Refer to the chart in Figure-15.

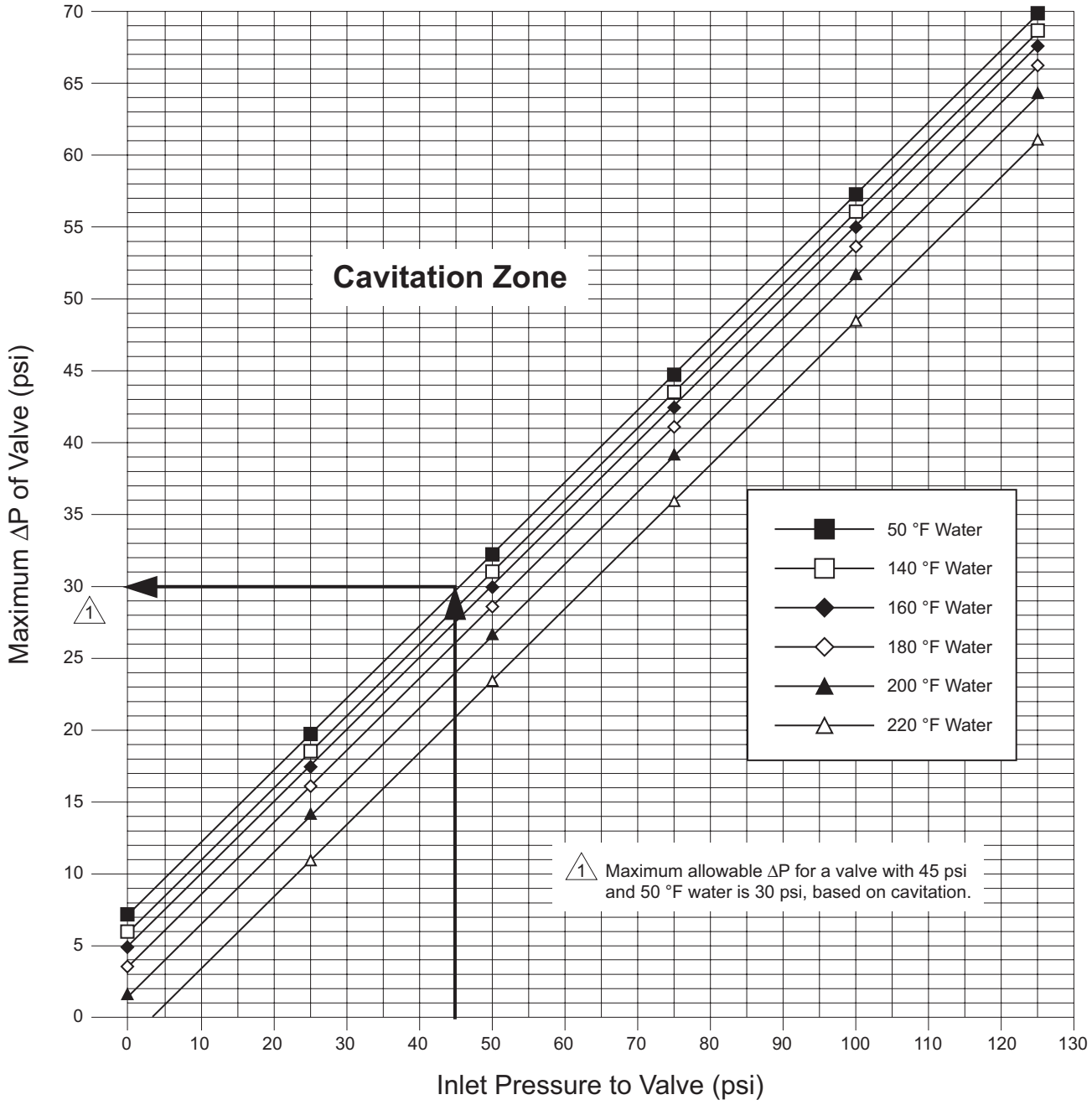

Figure-15 Maximum Allowable Differential Pressure (ΔP) for Water Valves.

Copyright 2006 TAC All Rights Reserved.

Using Pipe Reducers with 2-Way Ball Valve Assemblies

The following table provides estimated effective C_v's when using pipe reducers with 2-way ball valve assemblies. Use these estimated effective Cv's in place of the rated Cv's when reducers or increasers are located within 6 pipe diameters upstream and 3 pipe diameters downstream of the valve.

Warning: Do not reduce the valve size to less than one-half the line size, as this may weaken the pipe reduction area. Physical injury can result if the weakened piping fails.

Table-9 Estimated Effective Cv when Using Pipe Reducers with 2-Way Ball Valve Assemblies.

Valve Size (in.)	P Code	C_v	Estimated Effective C_v (k_{vs})									
			Pipe Size - inches (NPT)									
			1/2	3/4	1	1-1/4	1-1/2	2	2-1/2	3	4	5
1/2	01	0.38	0.38 (0.33)	0.38 (0.33)	0.38 (0.33)	—	—	—	—	—	—	—
	02	0.68	0.68 (0.59)	0.68 (0.59)	0.68 (0.59)	—	—	—	—	—	—	—
	03	1.3	1.3 (1.12)	1.3 (1.12)	1.3 (1.12)	—	—	—	—	—	—	—
	04	2.6	2.6 (2.24)	2.5 (2.16)	2.5 (2.16)	—	—	—	—	—	—	—
	05	4.7	4.7 (4.06)	4.3 (3.71)	4.1 (3.54)	—	—	—	—	—	—	—
	06	8.0	8.0 (6.9)	6.5 (5.6)	5.7 (4.9)	—	—	—	—	—	—	—
	07	11.7 [a]	11.7 (10.1)	7.9 (6.8)	6.7 (5.8)	—	—	—	—	—	—	—
3/4	11	0.31	—	0.31 (0.27)	0.31 (0.27)	0.31 (0.27)	0.31 (0.27)	—	—	—	—	—
	12	0.63	—	0.63 (0.54)	0.63 (0.54)	0.63 (0.54)	0.63 (0.54)	—	—	—	—	—
	13	1.2	—	1.2 (1.04)	1.2 (1.04)	1.2 (1.04)	1.2 (1.04)	—	—	—	—	—
	14	2.5	—	2.5 (2.16)	2.5 (2.16)	2.5 (2.16)	2.5 (2.16)	—	—	—	—	—
	15	4.3	—	4.3 (3.71)	4.3 (3.71)	4.2 (3.63)	4.2 (3.63)	—	—	—	—	—
	16	10.1	—	10.1 (8.7)	9.6 (8.3)	9.1 (7.9)	8.8 (7.6)	—	—	—	—	—
	17	14.7 [a]	—	14.7 (12.7)	7.1 (6.1)	6.5 (5.6)	6.2 (5.4)	—	—	—	—	—
	18	28.6 [a]	—	28.6 (24.7)	21.1 (18.2)	17.1 (14.8)	15.4 (13.3)	—	—	—	—	—
1	21	4.4	—	—	4.4 (3.8)	4.4 (3.8)	4.4 (3.8)	4.4 (3.8)	—	—	—	—
	22	9.0	—	—	9.0 (7.8)	8.9 (7.4)	8.8 (7.6)	8.7 (7.5)	—	—	—	—
	23	15.3	—	—	15.3 (13.2)	14.9 (12.9)	14.4 (12.5)	13.8 (11.9)	—	—	—	—
	24	26.1	—	—	26.1 (22.5)	24.4 (21.1)	22.4 (19.4)	20.3 (17.5)	—	—	—	—
	25	28.4 [a]	—	—	28.4 (24.6)	26.2 (22.7)	23.8 (20.6)	21.4 (18.5)	—	—	—	—
	26	43.9 [a]	—	—	43.9 (38.0)	36.8 (31.8)	31.0 (26.8)	26.1 (22.6)	—	—	—	—
	27	54.2 [a]	—	—	54.2 (46.8)	42.3 (36.6)	34.1 (29.5)	27.9 (24.1)	—	—	—	—
1-1/4	41	4.4	—	—	—	4.4 (3.8)	4.4 (3.8)	4.4 (3.8)	4.4 (3.8)	—	—	—
	42	8.3	—	—	—	8.3 (7.2)	8.3 (7.2)	8.2 (7.1)	8.2 (7.1)	—	—	—
	43	14.9	—	—	—	14.9 (12.9)	14.8 (12.8)	14.5 (12.5)	14.3 (12.3)	—	—	—
	44	36.5	—	—	—	36.5 (31.6)	35.0 (30.3)	31.5 (27.2)	29.6 (25.6)	—	—	—
	45	41.1 [a]	—	—	—	41.1 (35.5)	39.0 (33.7)	34.3 (29.7)	31.9 (27.5)	—	—	—
	46	102.3 [a]	—	—	—	102.3 (88.1)	79.1 (68.4)	53.3 (46.1)	45.5 (39.3)	—	—	—
1-1/2	51	22.8	—	—	—	—	22.8 (19.7)	22.4 (19.4)	22.0 (19.0)	21.8 (18.9)	—	—
	52	41.3	—	—	—	—	41.3 (35.7)	39.3 (33.9)	37.2 (32.1)	36.0 (31.1)	—	—
	53	73.9 [a]	—	—	—	—	73.9 (63.9)	63.7 (55.1)	55.9 (48.4)	52.0 (45.0)	—	—
	54	171.7 [a]	—	—	—	—	171.7 (148.5)	101.2 (87.5)	76.6 (66.3)	67.2 (58.0)	—	—
2	61	41.7	—	—	—	—	—	41.7 (36.1)	41.2 (35.6)	40.6 (35.1)	39.7 (34.3)	—
	63	71.1	—	—	—	—	—	71.1 (61.4)	68.8 (59.5)	65.9 (57.0)	62.4 (53.9)	—
	65	108.0 [a]	—	—	—	—	—	108.0 (93.4)	100.3 (86.8)	92.0 (79.6)	83.0 (71.8)	—
	66	210.0	—	—	—	—	—	210.0 (181.7)	165.9 (143.5)	134.6 (116.4)	110.5 (95.6)	—
	67	266.0 [a]	—	—	—	—	—	266.0 (229.7)	189.7 (164.1)	146.4 (126.6)	116.7 (100.8)	—
2-1/2	71	45.0	—	—	—	—	—	—	45.0 (38.9)	43.6 (37.7)	42.5 (36.8)	42.0 (36.3)
	72	55.0	—	—	—	—	—	—	55.0 (47.5)	52.5 (45.3)	50.6 (43.7)	49.7 (42.9)
	73	72.3	—	—	—	—	—	—	72.3 (62.5)	66.6 (57.6)	63.0 (54.5)	61.2 (52.9)
	74	101.0	—	—	—	—	—	—	101.0 (87.4)	87.5 (75.7)	79.7 (68.9)	76.2 (65.9)
	75	162.0	—	—	—	—	—	—	162.0 (140.0)	119.0 (102.9)	101.3 (87.6)	94.3 (81.6)
	76	202.0 [a]	—	—	—	—	—	—	202.0 (174.4)	132.4 (114.5)	109.3 (94.5)	100.6 (87.0)
3	82	63.0	—	—	—	—	—	—	—	63.0 (54.4)	56.7 (49.0)	55.5 (47.9)
	85	145.0 [a]	—	—	—	—	—	—	—	145.0 (125.2)	96.8 (83.7)	90.6 (78.4)

[a] Denotes a full port valve, without the characterized insert.

Copyright 2006 TAC All Rights Reserved.

Using Pipe Reducers with 3-Way Ball Valve Assemblies

The following table provides estimated effective C_v's when using pipe reducers with 3-way ball valve assemblies. Use these estimated effective Cv's in place of the rated Cv's when reducers or increasers are located within 6 pipe diameters upstream and 3 pipe diameters downstream of the valve.

Warning: Do not reduce the valve size to less than one-half the line size, as this may weaken the pipe reduction area. Physical injury can result if the weakened piping fails.

Table-10 Estimated Effective Cv when Using Pipe Reducers with 3-Way Ball Valve Assemblies.

Valve Size (in.)	P Code	C_v (A Port)	Estimated Effective C_v (k_{vs})						
			Pipe Size - inches (NPT)						
			1/2	3/4	1	1-1/4	1-1/2	2	2-1/2
1/2	01	0.33	0.33 (0.29)	0.33 (0.29)	0.33 (0.29)	—	—	—	—
	02	0.59	0.59 (0.51)	0.59 (0.51)	0.59 (0.51)	—	—	—	—
	03	1.0	1.0 (0.86)	1.0 (0.86)	1.0 (0.86)	—	—	—	—
	04	2.4	2.4 (2.1)	2.3 (2.0)	2.3 (2.0)	—	—	—	—
	05	4.3	4.3 (3.7)	4.0 (3.5)	3.8 (3.3)	—	—	—	—
	06	8.0 [a]	8.0 (6.9)	7.9 (6.8)	5.7 (4.9)	—	—	—	—
3/4	11	0.40	—	0.40 (0.35)	0.40 (0.35)	0.40 (0.35)	0.40 (0.35)	—	—
	12	0.66	—	0.66 (0.57)	0.66 (0.57)	0.66 (0.57)	0.66 (0.57)	—	—
	13	1.3	—	1.3 (1.12)	1.3 (1.12)	1.3 (1.12)	1.3 (1.12)	—	—
	14	2.4	—	2.4 (2.1)	2.4 (2.1)	2.4 (2.1)	2.4 (2.1)	—	—
	15	3.8	—	3.8 (3.3)	3.8 (3.3)	3.74 (3.23)	3.7 (3.2)	—	—
	16	11 [a]	—	11 (9.5)	10.4 (9.0)	9.8 (8.5)	9.4 (8.1)	—	—
1	21	0.40	—	—	0.40 (0.35)	0.40 (0.35)	0.40 (0.35)	0.40 (0.35)	—
	22	0.65	—	—	0.65 (0.56)	0.60 (0.52)	0.60 (0.52)	0.60 (0.52)	—
	23	1.3	—	—	1.3 (1.1)	1.3 (1.1)	1.3 (1.1)	1.3 (1.1)	—
	24	2.3	—	—	2.3 (2.0)	2.3 (2.0)	2.3 (2.0)	2.3 (2.0)	—
	25	3.5	—	—	3.5 (3.0)	3.5 (3.0)	3.5 (3.0)	3.5 (3.0)	—
	26	4.5	—	—	4.5 (3.9)	4.5 (3.9)	4.5 (3.9)	4.5 (3.9)	—
	27	8.6	—	—	8.6 (7.4)	8.5 (7.3)	8.4 (7.2)	8.3 (7.2)	—
	28	10.0 [a]	—	—	10.0 (8.6)	9.9 (8.6)	9.7 (8.4)	9.6 (8.3)	—
	29	14.9	—	—	14.9 (12.9)	14.6 (12.6)	14.1 (12.2)	13.5 (11.7)	—
	30	22.3 [a]	—	—	22.3 (19.2)	21.2 (18.3)	19.9 (17.2)	18.4 (15.9)	—
	31	30.8 [a]	—	—	30.8 (26.6)	28.0 (24.2)	25.2 (21.8)	22.3 (19.3)	—
1-1/4	41	4.1	—	—	—	4.1 (3.5)	4.0 (3.5)	4.0 (3.5)	4.0 (3.5)
	43	8.7	—	—	—	8.7 (7.5)	8.6 (7.4)	8.6 (7.4)	8.5 (7.4)
	44	12.7	—	—	—	12.7 (11.0)	12.6 (10.9)	12.4 (10.7)	12.3 (10.6)
	45	19.4 [a]	—	—	—	19.4 (16.8)	19.2 (16.6)	18.5 (16.0)	18.1 (15.7)
	46	34.1 [a]	—	—	—	34.1 (29.4)	32.9 (28.4)	29.9 (25.9)	28.3 (24.4)
1-1/2	51	4.0	—	—	—	—	4.0 (3.5)	4.0 (3.5)	4.0 (3.5)
	52	8.3	—	—	—	—	8.3 (7.2)	8.2 (7.1)	8.2 (7.1)
	53	13.4	—	—	—	—	13.4 (11.6)	13.3 (11.5)	13.2 (11.4)
	54	23.5	—	—	—	—	23.5 (20.3)	23.1 (19.9)	22.7 (19.6)
	55	32.0 [a]	—	—	—	—	32.0 (27.7)	31.0 (26.8)	30.0 (25.9)
	56	61.1 [a]	—	—	—	—	61.1 (52.8)	54.9 (47.5)	49.7 (43.0)
2	61	23.9	—	—	—	—	—	23.9 (20.7)	23.5 (20.3)
	62	38.2	—	—	—	—	—	38.2 (33.0)	37.8 (32.7)
	63	56.7 [a]	—	—	—	—	—	56.7 (49.0)	55.5 (47.9)
	64	108.5 [a]	—	—	—	—	—	108.5 (93.9)	100.7 (87.1)

[a] Denotes a full port valve, without the characterized insert.

Copyright 2006, TAC
All brand names, trademarks and registered trademarks are the property of their respective owners. Information contained within this document is subject to change without notice.

TAC
1354 Clifford Avenue
P.O. Box 2940
Loves Park, IL 61132-2940